JPRS 75410
1 April 1980

West Europe Report

No. 1559

FBIS FOREIGN BROADCAST INFORMATION SERVICE

NOTE

JPRS publications contain information primarily from foreign newspapers, periodicals and books, but also from news agency transmissions and broadcasts. Materials from foreign-language sources are translated; those from English-language sources are transcribed or reprinted, with the original phrasing and other characteristics retained.

Headlines, editorial reports, and material enclosed in brackets [] are supplied by JPRS. Processing indicators such as [Text] or [Excerpt] in the first line of each item, or following the last line of a brief, indicate how the original information was processed. Where no processing indicator is given, the information was summarized or extracted.

Unfamiliar names rendered phonetically or transliterated are enclosed in parentheses. Words or names preceded by a question mark and enclosed in parentheses were not clear in the original but have been supplied as appropriate in context. Other unattributed parenthetical notes within the body of an item originate with the source. Times within items are as given by source.

The contents of this publication in no way represent the policies, views or attitudes of the U.S. Government.

PROCUREMENT OF PUBLICATIONS

JPRS publications may be ordered from the National Technical Information Service, Springfield, Virginia 22161. In ordering, it is recommended that the JPRS number, title, date and author, if applicable, of publication be cited.

Current JPRS publications are announced in Government Reports Announcements issued semi-monthly by the National Technical Information Service, and are listed in the Monthly Catalog of U.S. Government Publications issued by the Superintendent of Documents, U.S. Government Printing Office, Washington, D.C. 20402.

Indexes to this report (by keyword, author, personal names, title and series) are available from Bell & Howell, Old Mansfield Road, Wooster, Ohio 44691.

Correspondence pertaining to matters other than procurement may be addressed to Joint Publications Research Service, 1000 North Glebe Road, Arlington, Virginia 22201.

JPRS 75410

1 April 1980

WEST EUROPE REPORT

No. 1559

CONTENTS

PAGE

THEATER NUCLEAR FORCES

FRANCE

Automatic Piloting for Combat Aircraft Described
(Jacques Thebaud; AIR ACTUALITES, Jan 80)..... 1

COUNTRY SECTION

INTERNATIONAL AFFAIRS

Dutch Official Remarks at German CDU Foreign Policy Session
(Ben Knapen; NRC HANDELSBLAD, 6 Mar 80)..... 16

Inflation, Unemployment Shatter EEC Industrial Development
(Pierre Drouin; LE MONDE, 7 Feb 80)..... 18

EEC Industrial Productivity, Adaptation to Petroleum Crisis
(Philippe Lemaitre; LE MONDE, 12 Feb 80)..... 22

AUSTRIA

Briefs
South African Coal 27
Staribacher to Visit Africa 27

BELGIUM

Air Force Considers F 16's, Alpha Jets Highly Successful
(Pierre Bary; LE SOIR, 11 Feb 80)..... 28

CYPRUS

Cypriot Education Minister Reportedly Snubbed by Athens
(EIKONES, 15-21 Feb 80)..... 31

CONTENTS (Continued) Page

Briefs
Turkish Admiral Arrives 33

DENMARK

80 Billion Kroner Foreign Debt Expected To Be 100 Billion by 1981
(MANEDS BORSEN, Feb 80)..... 34

Record Budget Deficit Means Tight Credit Picture
(MANEDS BORSEN, Feb 80)..... 36

Budget Department Issues Forecast for 1980 Fiscal Year
(MANEDS BORSEN, Feb 80)..... 37

FEDERAL REPUBLIC OF GERMANY

Press on Green Party Baden-Wuerttemberg Election Success
(Deutschlandfunk Network, 17 Mar 80)..... 39

Progress of FDP Election Campaign Assessed
(Thomas Meyer; FRANKFURTER ALLGEMEINE, 7 Mar 80)..... 43

FRANCE

Columnists Analyze Soviet Image, Intent in Afghanistan
(LE FIGARO, various dates)..... 46

Reasons for Soviet Intervention, by Annie Kriegel
Problems of Soviet Occupation, by Paul-Marie de la Gorce
Implications for European Security, by Alfred Fabre-Luce

Political Figures View Implications of Afghanistan Invasion
(LE FIGARO, 23 Jan 80)..... 54

French Foreign Policy Implications, by Jean Lecanuet
Detente, East-West Relations, by Jean de Lipkowski
French-U.S., USSR Relations, by Lionel Jospin

CONTENTS (Continued) Page

Strategic Doctrines of U.S., USSR Viewed
(Georges Outrey; DEFENSE NATIONALE, Feb 80)..... 59

Status of Trade With USSR Outlined
(Marie Sellier; L'USINE NOUVELLE, 24 Jan 80)..... 71

Bonnet Says Corsican Terrorism 'Directed From Abroad'
(LE MONDE, 1 Feb 80)..... 75

GREECE

Prospects on Future ND Party Leadership Analyzed
(Gerardos Deviliadis; ANDI, 15 Feb 80)..... 77

Sweden Proposes To Modernize Nation's Railroad Systems
(O OIKONOMIKOS TAKHYDROMOS, 17 Jan 80)..... 82

ICELAND

Independence Party Leader Comments on New Government's Chances
(Birgir Isl. Gunnarsson; MORGUNBLADID, 10 Feb 80)... 85

Independence Party Leader Jonsson: We Can Avoid Split
(MORGUNBLADID, 8 Feb 80)..... 88

Paper Attacks New Government for Lack of Security Policy
(Editorial; MORGUNBLADID, 10 Feb 80)..... 91

Saudi Arabia Offers To Sell Oil to Iceland
(MORGUNBLADID, 6 Feb 80)..... 93

Foreign Borrowing Increases 24 Billion Krona in 1 Year
(MORGUNBLADID, 8 Feb 80)..... 95

ITALY

PCI's Chiaromonte Criticizes Labor Union Movement
(Gerardo Chiaromonte; RINASCITA, 22 Feb 80)..... 96

PORTUGAL

Public Opinion Poll Gives Support to Government, President
(EXPRESSO, 1 Mar 80)..... 106

CONTENTS (Continued) Page

New Directions Appear in African Policy
(Luis Cid Pinto; DIARIO DE NOTICIAS, 1 Feb 80)..... 117

CGTP Leadership Shows Signs of Internal Disagreement
(Maria Guiomar Lima; DIARIO DE NOTICIAS, 1 Feb 80).. 119

SPAIN

PCE Seen To Be Increasingly Isolated in Carrillo's Report
(EL PAIS, 5 Feb 80)..... 122

SWEDEN

Socialists' Party Secretary Andersson Woos Liberals, Center
(Sven Thiessen; DAGENS NYHETER, 11 Feb 80)..... 124

Liberals' Leijonborg: Centralization Must Be Reduced
(Lars LeijonborgInterview; DAGENS NYHETER, 12 Feb 80)..... 127

Socialists' Lonnqvist: Threat From Right Worse Than CP's
(Ake Ekdahl; DAGENS NYHETER, 16 Feb 80)..... 130

Falldin's Nuclear Policy Prepares Way for Growth of CP
(Sven Svensson; DAGENS NYHETER, 21 Feb 80)..... 134

Bourgeois Coalition Likely To Continue After N-Vote
(Sven Svensson; DAGENS NYHETER, 22 Feb 80)..... 137

Book Challenges General Belief That N-War Unlikely
(Britt Theorin; DAGENS NYHETER, 20 Feb 80)..... 140

Armed Forces Chiefs Discuss Budgets, Equipment, Readiness
(Erik Liden; SVENSKA DAGBLADET, 3 Feb 80)..... 144

Government To Ask Riksdag To Purchase JAS for Air Force
(Sven Svensson; DAGENS NYHETER, 21 Feb 80)..... 150

Army Discovers Clothing Inadequate for North Winter Games
(Caj Noren; DAGENS NYHETER, 13 Feb 80)..... 153

CONTENTS (Continued) Page

Study Shows High Rate of Alcohol Abuse in Military
(Erik Sidenbladh; SVENSKA DAGBLADET, 15 Feb 80)..... 155

Briefs
More VPK Support 157
Conservatives, VPK Gain in Poll 157

TURKEY

'HURRIYET': Spreading Terrorism Is Due to Penal Code Insufficiency
(Editorial, Oktay Eksi; HURRIYET, 12 Mar 80)..... 158

Briefs
Earth Tremors Registered 160

AUTOMATIC PILOTING FOR COMBAT AIRCRAFT DESCRIBED

Paris AIR ACTUALITES in French Jan 80 pp 26-31

[Article by Jacques Thebaud, SFENA* engineer]

[Text] Originally developed for commercial aircraft, automatic pilots were rather late in making their appearance aboard combat planes.

But it was in connection with the latter that the rapid development of these automatic devices saw them transformed from mere flying aids into genuine "copilots."

The current sophistication of these "automatic copilots," is aimed solely, in fact, at improving the effectiveness of the weapons system, which the pilot must also operate, by permitting the pilot more freedom to concentrate on the latter.

A Logical Progression

Advances in aerodynamics and propulsion at the end of World War II resulted in considerably improved performance parameters: speed and altitude records were bettered with clock-like regularity.

But as the flight enviroment of combat planes was extended, difficulties appeared with regard to piloting, flight path control... Thus, properly designed controls and control surfaces for low-level flight lost effectiveness at the higher altitudes; transonic speeds also gave rise to some special problems.

Airplane designers therefore had to seek a compromise between performance parameters and vehicle control systems that was often hard to resolve. These problems necessitated the introduction of electromechanical or electronic devices designed to improve the plane's stability artificially.

---

*[French Air Navigation Equipment Company]

The earliest devices of this type were of the damping or automatic stabilizing types. In the control sequence, these devices, in effect, supplemented the pilot's control commands with damping commands obtained by combining gyro rate measurements of the plane's angular speeds during pitching, rolling and yawing.

Then came Autocommande-equipped servo controls on the Super-Mystere B2 and Mirage III, designed to resolve special piloting problems in maneuvering a combat plane under high load-factor conditions. [See Exhibit A].

Automatic pilots [AP's], on the other hand, which were already in use on commercial airliners, seemed unsuitable for combat aircraft. The latter were therefore rarely so equipped; in France, only the Mirage IV, whose cruising radius justified it, was AP-equipped. [See Exhibit B].

A certain number of problems had, in fact, to be resolved in regard to the interface between automatic and human pilots before the first AP's fully suited to the requirements of modern combat planes could make their appearance.

The Interface Between Human and Automatic Pilots

The piloting of a combat plane is characterized by a far greater... variety and "unforeseeability" of maneuvers than that of a transport plane. The pilot of a combat plane is likely to be confronted by "unexpected" situations to which he must react instantaneously: an obstacle that must be avoided while flying at a low level, a point on the ground requiring observation, a sudden threat from the ground or from the air.

Minimizing the Transition

Such circumstances necessitate immediate interruption of the action in course, to change the plane's trajectory. The pilot must therefore have the means to take control of the aircraft back from the AP instantly and without constraints. The pilot may also be faced with the need to fly the plane and at the same time operate the weapons system.

In this case, the pilot very much wants the AP to "spontaneously" take over and continue uninterruptedly flying the airplane as soon as he releases the manual controls to devote his full attention to the weapons system.

Clearly then, the interface between the human pilot and the AP must be as "transparent" and as smooth as possible. The ideal would be for the AP to behave as if it were carrying out the pilot's intentions; in other words, for it to relieve the pilot, without the latter having to think about the transition, and continue piloting the plane as the latter himself would have done.

Of course, one cannot expect an AP really to be able to know the pilot's intentions. However, today's equipment is able to analyze, within limits, the pilot's behavior at the moment of transition and to adapt its own functions to that behavior.

Generally speaking, that is, developmental effort over the last several years has been directed toward rendering the transition between the human piloting and automatic piloting modes more and more "natural" and instinctive.

Development of the AP

Evolution of the AP can be illustrated by a few examples:

--The Mirage IV's first AP could be coupled and decoupled by means of an engaging lever. However, the pilot also had a means of instinctively decoupling it: in an emergency, he could take back manual control of his plane by simply pressing hard enough on the stick, without having to operate the engaging lever.

The user was also bound by certain constraints: for instance, the AP could not be engaged while the plane was in a turn.

--The next stage can be marked by the Mirage F1's AP. It involves a so-called "disconnectable" mode, wherein the pilot's hand naturally squeezes a trigger while grasping the joystick: as long as this trigger is squeezed the AP is disconnected; as soon as the pilot releases the stick, it is reconnected.

This simple device greatly increases operational flexibility; the pilot need only commence a maneuver manually, then, by simply releasing the stick, leave it to the AP to continue the maneuver. Thus, a pilot can effect a climb as follows: The plane is flying level with the AP; the pilot grasps the stick and brings the plane into proper attitude for the desired climbing rate, then releases the controls, and the AP continues the climb, holding the attitude.

If at any time during the climb the pilot decides the attitude is insufficient, he can correct it using the stick, and the AP will hold the new attitude.

To carry out this maneuver, therefore, the pilot has only intervened during the transitory phase, and his action has been identical to what he would have done in the absence of an AP. The successive changeovers from automatic to manual have not required any special procedure.

Besides, the Mirage F1's AP represents a first step toward taking into account the pilot's unexplicit intentions. When the pilot leaves control of the plane to the AP after having initiated a bank, the AP "considers"

that it was actually the pilot's intention to bank, and thus continues the bank at the same tilt. If, on the other hand, the pilot releases the controls while the plane is in horizontal flight, the AP maintains the heading.

--On the Mirage 2000, the AP goes somewhat further in interpreting the pilot's intentions. In addition to the above capabilities, this AP is equipped with a mode-memory system that offers interesting capabilities.

Thus, when the pilot retakes manual control of the plane, the AP continues "observing" the responses commanded by the pilot. If these vary only slightly from those previously maintained during the automatic piloting phase, the AP "considers" that the pilot took manual control only transitorily--for example, to aid the AP in gaining altitude during a climb, or to modify the tilt during a bank, or to improve downward visibility by tilting the plane--and in this case the AP retains memory of the preceding control values and flight modes and resumes monitoring them as soon as the pilot releases the controls again.

If, on the other hand, after the pilot takes manual control, the plane's responses vary widely from the control parameters previously maintained, it means that the pilot has commenced a totally different maneuver; the modes relative to the preceding automatic piloting phase are therefore erased.

Improved Integration

In addition to the means of connection and disconnection of the AP and of its various modes, the interface with the human pilot includes also special AP controls.

Referring again to the equipments cited above, one may observe the evolution of these controls towards fuller integration with conventional piloting means.

The Mirage IV's AP was equipped with specific controls (pitch wheel and roll lever) enabling modification of the pitch attitude and the angle of roll.

The AP of the Mirage F1 and the modernized AP of the Mirage IV are equipped with a trim "cone"[1] mounted on the stick, which in turn is inactivated during automatic compensation.

---

1) Trim balancing controls act upon the control surfaces. Grouped over a single push-rod, the electrical controls for lateral balancing (left/right) and pitching (nose up/nose down) form a notched (or grooved) fir-tree-like assembly. [Translator's note: French descriptive term "sapin" (fir or spruce tree) for this assembly seems better rendered as "cone" in English (see drawing)].

Key:

1. Trim cone
2. Automatic pilot disconnect trigger

During automatic piloting, a lengthwise pressure (up or down) or a lateral pressure (left or right) on the trim cone will modify, respectively, the initial longitudinal attitude or the heading, by a calibrated amount.

The more advanced integration of the weapons system in the Mirage 2000 includes displaying in the sight the slope ordered by the AP, enabling the pilot to read the slope and modify the order to be executed by his AP.

What Does the AP Add to a Fighter Plane?

One can eas.ly imagine the advantages offered by an AP on a commercial airliner during long stages of a stabilized flight, each stage being piloted by a suitable automatic mode.

Freeing the Human Pilot

Its similar application in a fighter plane is, of course, also advantageous while cruising, in that it relieves the pilot of the relatively boring task of routine piloting. But a fighter plane's reason for being is the accomplishment of an operational mission, and it is in this context that the aid of an AP is essential. The success of a mission depends greatly, in fact, on the freedom of the pilot to concentrate on handling the plane's weapons system. Dependence upon increasingly sophisticated navigation and weapons systems places such a heavy workload upon the pilot that during certain "intensive" phases he can no longer concentrate sufficiently on the task of routine piloting.

For example, when the pilot must direct his attention at once and the same time to the navigation, arming of the missiles, surveillance of the radar screen, and countermeasures, he must be able to free himself entirely from the task of piloting and to entrust it with full confidence to the AP. The AP must therefore be designed in such a way as to assure the conduct of the flight but also its safety while in the automatic mode.

An Efficient Aid

The AP, however, provides not only the relief required to enable the pilot to handle the weapons system, but also an invaluable aid in carrying out certain delicate phases during the mission. [See Exhibit C].

The Mirage IV's modernized AP enables the carrying out of penetration missions of long duration, at very high speeds and very low altitudes, under conditions in which manual piloting would be severely taxing and risky.

An appropriate control on the stick, coming from the trim cone (balancing knob) assembly, enables the AP, while remaining in the automatic mode, to follow the contours of the terrain, automatically ordering precalibrated control increments to the datum attitude conforming to the required operational climb rates.

This control is also used for GCA[2] approaches in the Automatic piloting mode. The slope and heading increments obtained by operating the "trim cone" are calibrated to conform to the corrections ordered by the operator.

The AP on the Mirage F1 and Mirage 2000, on the other hand, is designed to perform ILS[3] approaches. It picks up the runway marker and glide slope radio signals[4] and then the glide path guidance signals down to an altitude of 200 feet.

The landing of a carrier plane on the flight deck of the carrier is also a very delicate maneuver that can be considerably aided by automatic piloting. The Super-Etendard, for example, is landed at an angle very close to that of takeoff, and requires extremely "sharp" piloting. The precise maintenance of this angle is performed by the "Automanette" [automatic throttle lever] of the AP. The pilot can thus dedicate his full attention to the stick-piloting of his glide path, the throttle lever being automatically controlled by the "Automanette."

---

2) Ground Controlled Approach: an approach guided by ground radar.

3) Instrument Landing System: ground equipment transmits two radio-frequency beams: one indicates the runway boundaries, and the other the line of descent.

4) See note 3) above.

Lastly, concerning the canon-firing phases, use of the AP aboard the Mirage III results in better stabilization of the gun platform and hence greater firing precision.

Functions Performed by the AP

Besides its auxiliary display and software functions, an AP essentially performs piloting functions in accordance with several modes, as well as their associated safety functions.

The automatic piloting functions, defined on the basis of the needs of the mission, depend also upon the pickups aboard each plane.

Improved Basic Performance

On a plane equipped solely with a vertical gyro system, the AP's basic mode consists generally of maintenance of attitudes and therefore of the following parameters: longitudinal attitude, heading and angle of roll of the plane's position referenced to ground axes; and, if necessary, long-term sideslip control. Several other modes are available for selection by the pilot: maintenance of current altitude, gain and maintenance of a selected altitude or of a preselected heading.

If the plane is equipped with an inertial system, as in the case of the Mirage 2000, the AP can maintain the plane's slope and course. Since these parameters define the orientation and speed of the plane, the AP is thus able to maintain the path of the plane and not just its attitude.

On planes equipped with TACAN or VOR/ILS receivers, the AP is also capable of picking up and holding radio beams [5].

Lastly, AP specialized functions may include the Automanette mode consisting of automatic piloting of the plane's thrust. The Super-Etendard is currently the only French fighter plane equipped with this device.

And Associated Safety

Paradoxically, the thorniest problems encountered in designing an AP are not always concerned with the piloting function itself, but frequently with the associated safety system. The purpose of an AP is, after all, to allow the pilot to devote his attention to a task other than the routine flying of the plane.

Under these conditions, while the plane is being automatically piloted, the pilot's reaction to a failure modifying the plane's trajectory is likely to be more delayed than if it were being manually piloted.

---

5) TACAN and VOR are navigational radio beacons.

The safety system associated with the AP must therefore be capable of returning control to the pilot in a satisfactory state of safety regardless of any failure that may have occurred, and reaction time notwithstanding.

The AP must moreover be able to handle all failures that could result in a dangerous movement of the plane, whether the origin of such failure is the AP itself or some other component in the flight control chain.

Self-Monitored and Tested

This is why the safety devices used in a modern fighter plane are generally of the "synthetic" type; that is, they monitor not the operation of a calculator but rather the plane's movements directly. The principle consists of evaluating the maximum values of angular velocities, inclinations, altitude variances, etc. that could be commanded by the AP in a given mode. If any of these values is exceeded, this means that one of the components in the flight control chain is in trouble.

The pilot is warned of this by an appropriate signal and the AP immediately taken out of service.

The actual operating condition of these devices does not become evident until a failure occurs that must be detected; it is therefore possible that a trouble in the devices themselves could go undetected until they were needed.

To minimize this risk, the operation of the safety devices is checked before the flight by means of a test device connected to the AP calculator. This test, which is automatic, takes several seconds.

Technological Evolution

As is true of all aeronautical equipment, the technological evolution of AP's has been extremely rapid over the past several years.

The earliest equipment involved numerous electromechanical components. These gave way some 15 years ago to analog electronics technology based on integrated components and printed circuitry. Analog technology has given way today to digital technology.

A Logical and Foreseeable Evolution

The benefit of this evolution has been an appreciable reduction in the volume of electronic hardware necessary to perform a given function. The space thus made available has made it possible to accommodate more sophisticated functions.

This evolution has resulted in :

--increased flight safety in automatic modes, thanks to more complete and better designed safety devices;

--improved piloting performance, owing to increased calculating capability, especially through the use of digital techniques;

--a more subtle interface with the pilot, thanks to more flexible software permitting the programming of a larger number of conditions.

In addition, this evolution has brought about an appreciable gain in reliability, hence increased operational availability of planes.

Lastly, the self-testing capabilities of digital calculators has facilitated equipment maintenance, even though the latter grows more and more complex.

Improved Operational efficiency

In the military domain, the current evolution in avionics makes itself felt as an ever increasing complexity in navigation and weapons systems--ever better performers, having, however, to operate in an ever more hostile environment.

The user of a modern military combat plane must therefore be not only a pilot but must also be able to make maximum use of the navigation and weapons system resourses at his disposal. This requires a genuine "automatic fighter copilot"; and this means a flexible and perfectly coordinated automatic piloting system.

The conceiving of such systems comes about through continual research on piloting modes and new pilot interfaces enabling the more efficient carrying out of a mission.

[Exhibit A]

Operating Principle of an "Autocommande" Servo Control

The purpose of an Autocommande-equipped servo control is to facilitate the manual piloting of the plane by improving its damping and relaying to the pilot a homogeneous effort-to-load factor(g)-regulated response throughout the flight environment.

The electronic equipment comprising the Autocommande is interposed in parallel with the steering system, between the stick and the servo control actuator that operates on the elevator, as indicated in the following diagram:

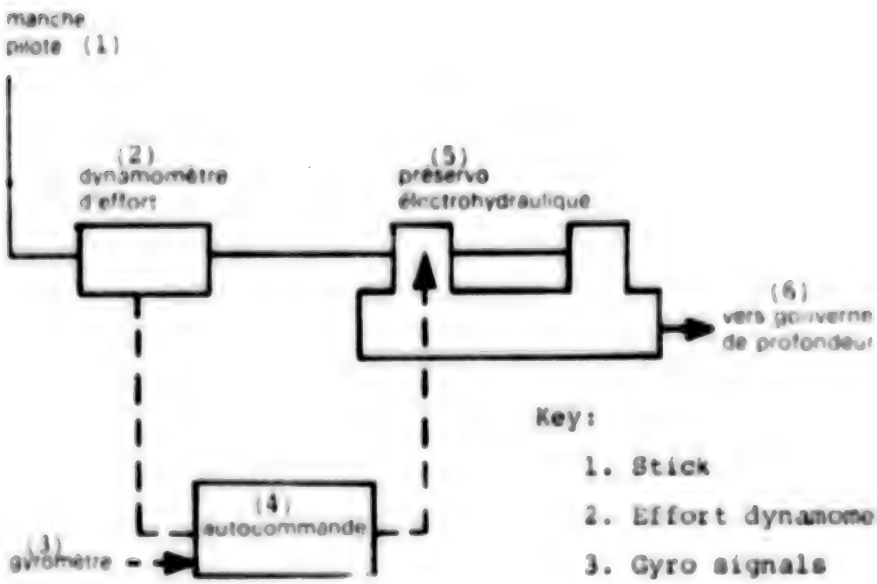

Key:

1. Stick
2. Effort dynamometer
3. Gyro signals
4. Autocommande equipment
5. Electrohydraulic servo amplifier and actuator link
6. To elevator

The Autocommande receives signals from:

--a dynamometer that measures the pilot's effort on the stick;

--a gyro that detects the plane's angular pitching rate.

Combining these signals, it addresses a control order to the electrohydraulic servo amplifier and actuator link.

When the Autocommande is not switched in, the piloting is done through the mechanical steering system.

When the Autocommande is switched in, the servo control interlocks the entire steering system (from the stick to the elevator), keeping it tightly linked together; the servo control then operates entirely in the electrical mode, and the steering system is actuated in accordance with the orders received from the Autocommande.

The pilot always has the impression that the system is being actuated by his own effort, although in reality his effort is being sensed and signaled to the Autocommande, which combines it with the signals from the gyro to produce an elevator-position change order on the servo control link, which finally actuates the elevator; and it is this elevator-position change, in turn, that moves the steering system and hence the stick itself.

The correct elevator deflection is calculated electronically in the Autocommande independently of the steering system's mechanical characteristics. It is calculated in such a manner that an effort of any given value applied by the pilot to the stick will result in the same load factor, regardless of what point in the flight environment is being considered. This calculation also optimizes damping throughout the flight environment.

[Exhibit B]

Operating Principle of an Automatic Pilot

The purpose of an automatic pilot [AP] is to relieve the pilot of having to monitor and maintain a certain number of parameters and elements characterizing the plane's movements.

Its basic operating principle is extremely simple. Let us take, for example, its "hold altitude" mode:

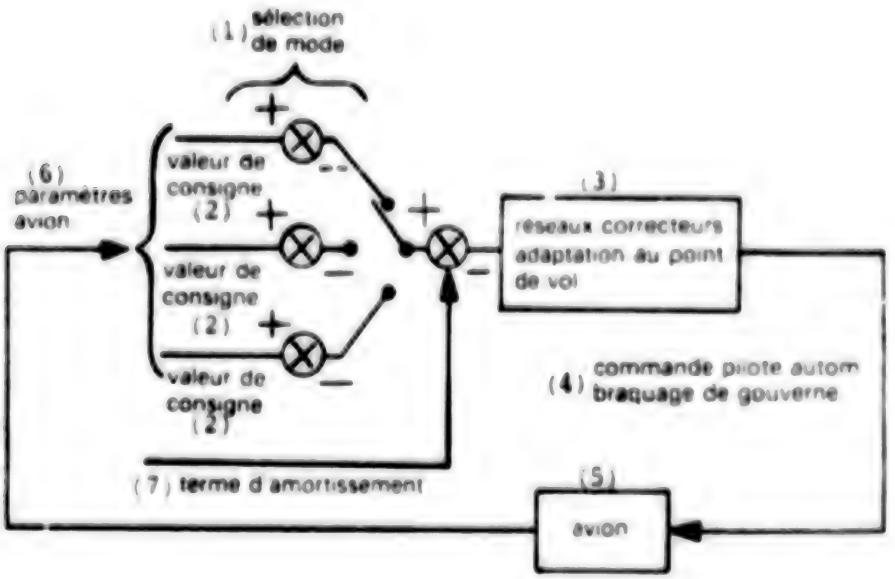

Key:

1. Mode selection
2. Datum value
3. Corrector network--adjustment to flight environmental conditions
4. AP control--control surface deflection
5. Plane
6. Plane's parameters
7. Damping time

The AP consigns to memory the datum altitude that the pilot wants to hold. It calculates constantly the variation between this value and the plane's actual altitude.

Based on this variation, it produces an order to the actuator to operate on the control surface to annul the variation; thus, if the plane is above datum altitude the order will be to dive.

The AP's function in this mode, therefore, is simply to maintain altitude variation constantly at zero. The AP's calculation of a control surface deflection order takes into account the flight environmental conditions, to ensure that the plane's movements during automatic piloting will be sufficiently rapid and correctly damped.

[Exhibit C]

Principal Characteristics of Automatic Piloting Equipment on French Military Planes

Mirage III	C :	SFENA 292 B Autocommande and after 1975 SFENA B 13 AM Autocommande
	E :	SFENA 293 Autocommande
	R :	SFENA 292 Autocommande
Mirage IV	:	SFENA 331 Automatic Pilot and after 1979 Automatic Pilot
		SFENA 525 Flight Director
		Hold: attitude, altitude, present heading, posted heading, navigational course
		Long-term anti-sideslip
Mirage F1	:	SFENA 505 Automatic Pilot
		Hold: attitude, altitude, present heading, angle of roll, posted heading
		Pick up and hold radio beams: VOR, TACAN, ILS (runway, slope)
Super-Etendard	:	SFENA A 53 A Automatic Pilot
At low altitude	:	Hold: present heading and radio altimeter altitude
Cruising	:	Hold: present heading, attitude, pressure altimeter altitude
Carrier-landing	:	Automanette
Jaguar	:	SFENA 205 Automatic Pilot
		Hold: attitude, altitude and present heading

Mirage 2000	:	SFENA 605 Automatic Pilot
		Hold: attitude, slope, angle of roll
		Pick up and hold: heading, altitude, radio beams
		Option: pick up and hold a preselected altitude and horizontal course

9399
CSO: 3100

DUTCH OFFICIAL REMARKS AT GERMAN CDU FOREIGN POLICY SESSION

LD1216S3 Rotterdam NRC HANDELSBLAD in Dutch 6 Mar 80 p 4 LD

[Dispatch by Ben Knapen: "Christian Democratic Union Conference: Firm Against Moscow"]

[Excerpts] Bonn, 6 Mar--Harmony has reigned in the past 2 days at a Christian Democratic Union [CDU] foreign policy study session in Bonn. Both German and non-German experts and politicians stressed the need for more united Western determination toward the Soviet Union and for increased defense efforts.

Dutch Prime Minister Van Agt also advocated increased defense efforts. He arrived at the Konrad Adenauer Building in Bonn at 1500 hours yesterday and left the CDU headquarters again immediately after delivering his speech because of cabinet problems at home. Furthermore, Van Agt spoke in English ("because my admiration for German is greater than my mastery of it").

If the United States has to assume military tasks in other places "then others must jump into the breach. I am not only looking toward the FRG--this will be a joint task for all of us," Van Agt said to applause from the audience. The Dutch Prime Minister said that a large majority of the Dutch people have great faith in the Western alliance and he explained why The Netherlands had shown reservations about NATO modernization in December. He pointed to the lack of parliamentary support in the chamber for the introduction of medium-range nuclear missiles. Moreover, Van Agt dispelled any doubts that The Netherlands will ultimately show solidarity if the Soviet Union offers no prospect of successful arms talks.

At the same time, however, he pointed out that missiles could be "installed" more conveniently at sea. This would make it easier to insure constant mobility than is the case on land, there would be no need to fight with protesting action groups and the missiles would not be in heavily-populated areas as is the case in The Netherlands.

Van Agt also spoke about European values. His subject was "The responsibilities and tasks of Free Europe in the world." He reproached free Europe for "not really" being concerned about the Third World's needs. "I cannot stifle my concern over a specific trend toward moral decay in our society," the Dutch Prime Minister said.

He advocated the peaceful use of nuclear energy because there will otherwise be no energy left for the Third World. I would like to nail this thesis to the wall of the Konrad Adenauer Building [reference to Luther nailing his theses to the church door] declaring solidarity with the Third World while rejecting nuclear energy is inconsistent."

In response to the ensuing applause Agt said: "I do not think I can count on such applause at home in a few hours time." He left the building immediately after his speech and flew back to The Hague.

CSO: 3105

INFLATION, UNEMPLOYMENT SHATTER EEC INDUSTRIAL DEVELOPMENT

Paris LE MONDE in French 7 Feb 80 pp 1, 34

[Article by Pierre Drouin: "Europe Shattered: The Crisis and Industrial Structures"--passages between slantlines in italics]

[Text] The economic crisis should have been an eye-opener for Europe. Instead it stupified it. The resurrection of the cold war should have awakened the EEC, as it did the first time. It has benumbed it: the French speaking on one side, the English on the other. Underneath appearances, after more than 20 years of common experience for the oldest members of the Community, do we see at least the outlines of structures which will permanently tie together their economies?

The reading of recent texts which were kept confidential for too long does not, undoubtedly, give us means to answer this last question definitively. The Maldague report--from the name of Commissioner of Planning in Brussels--on the /"evolution of sectoral structures in the European economies since the oil crisis (1),"/ just published, emphasizes the different modes of adjustment of the different countries of the Common Market.

The Federal Republic of Germany has sought to improve the effectiveness of its methods of production since the early seventies, to compensate for the effects of the revaluation of its currency on its foreign sales. With this impetus, and despite the slowing-down of activity, it was able to maintain high growth rates of productivity (on the order of 4.5 percent per year, while the Community's mean annual rate was 2.9 percent) even after the oil crisis. From 1973 to 1977 this was accomplished, no doubt, to the detriment of employment. Unemployment grew in this period, more than in France, Great Britain, and Italy, but the situation then reversed itself.

This is one more proof that the "purging" of production methods leads quite naturally to improvement in the social situation of the country. As the authors of the Maldague report write: /"The FRG is established as an equal partner of the United States and Japan, more able to exploit the opportunities for a return to stable growth that a more firm upturn

in international trade could offer. Thus its economic performance since 1977 in investment growth, external balance, and prices are tangible proofs of its emergence from the crisis, the perverse economic effects of which are well on the way to being moderated."/

The medium-size European countries have seen their capacity for autonomous response to crisis reduced. Belgium is affected through its heavier commitment to traditional industrial sectors (textiles, metallurgy); the Netherlands--in a better position--and Denmark are still experiencing today great problems in recovering their pre-1973 growth rate in exports.

France, in the eyes of the experts, seems to be in a more uncertain position. The slowdown which it demonstrated in 1970 in productive structures was significantly overcome by a considerable effort at [increasing] productivity, and it can boast fairly good performances in certain high technology sectors (nuclear, aeronautics, electronics), but the relative weakness of its big intermediate industries (chemicals, metallurgy) and the slowdown in food and agriculture industries still constitute elements of weakness, to which must be added a still too recent presence in the big export markets (2).

Italy and the United Kingdom, finally, demonstrate at the macro-economic level negative performance characterized by a very weak rate of investment, steep increases in the costs of production, and profound deterioration in the value of their currency. Confronting the disparities in this situation, this shattered Europe, the experts ask whether the European monetary system can achieve its objectives, of which one is to overcome the most keen structural differences between the member countries of the EEC.

No Aggressive Spirit

There is nothing, in any case, to indicate a better coherence between the national industrial policies. In a note written up for the working group on "international prospects" of the general commissariate on planning, Mr Robert Toulemon, long stationed in Brussels (3), remarks specifically that the Community's activity has been much more effective defensively than offensively. If there is a strategy to protect the textile industries (the multifiber agreements), metallurgy (the Davignon plan), or naval construction (efforts to harmonize national subsidization policies), one nevertheless finds the Community bankrupt when it comes to the growth sectors.

Doubtless, some European cooperative efforts have succeeded (Airbus, Eurodif, Ariane), but this should not mask the fact that national compartmentalization remains the rule, whereas an accelerated European development strategy for new industries would be required, in a world more and more open to competition.

According to Mr Robert Toulemon, four actions should be taken straightaway:

1. The elimination of unnecessary governmental restrictions which weigh on the conduct of companies, especially through control of capital movement, and which hinder the consolidation of European firms;

2. Much more vigorous coordination of public assistance to innovation and to mass production of new products, systems, or services. A model for industrial development contracts destined for middle-sized industrial groups, including reimbursable loans (reimbursable in event of success) was proposed by the commission around 1970. It was judged too interventionist by Germany and too "supranational" by France;

3. A common policy on public acquisitions. The governments have only agreed on guidelines for publicizing opportunities, in the three big markets, in the most traditional sectors: public works and current administrative supplies. Excluded are data processing, telecommunications, the electro-nuclear field, and bio-industry. The concept of new "telematics" networks is being developed in total anarchy. The European countries are not even capable of organizing a community airspace and thus offer, without opposition, the right to exploit connections between the capitals of the Old Continent to extra-European countries.

4. A common policy on export support, and product and technique promotion. For example, one powerful instrument would be a European export credit company which, like the American Eximbank, would be both a credit source and guarantor.

The Crisis of Mixed Economies

On a more general level, we are watching the "crisis of mixed economies" in Europe. This formulation is extracted from the excellent report of the working group chaired by Jacques Delors (4). We have in effect reached the stage where the play of the market and public intervention are in increasing disharmony, the first often functioning poorly, the operation of the second lacking in coherence and rationality, where different groups oppose and neutralize each other, compromise being achieved only through [forwarding] the explosive buildup of inflation and unemployment. The European economies manifest, in different ways, an absense of flexibility, inequality in the distribution of power, bitterness in the struggle for shares of the national income, all the factors which make for dissatisfaction of the people.

Analyzing on the other hand the limits on common policies, the failure of the economic and monetary union, the authors of this report insist on the necessity to take cognizance of the profound divergences which exist in Europe ("not only among nations, but also among the types of ideas and social forces...The failures of the European economic miracle, then still

more the crisis have shattered the common fund of ideas which inspired economic and social policies since the war,"/ and which fund, described generally as "Keynesian," was a /"vague model which brought together concepts of economic regulation in growth conditions, the extension of welfare policies, and a certain 'Fordism' allowing for support of expansion by a growing demand for durable consumer goods."/

Virulent inflation would shuffle all the cards and throw into question these common ideas, on the right by giving wings to neo-liberalism, on the left by arousing more radical critiques of the system. Social confrontation has been much more marked by doctrinal cleavages, and our experts consider very significant the failure of the last tripartite European conference in November 1978, in the course of which labor and management positions became irreducibly irreconcilable, the community authorities being unable to bring about an acceptable compromise.

How to escape from this downhill spiral? The Belers report courageously insists on two ideas which appear antithetical, but which must be reconciled if we wish to get on a more realistic path. The first is that the Community must acquire the means to provide counterbalancing, both to regulate the smooth functioning of markets and the operations of big international firms, and in the domain of regional policy and the coordination of various social projects such as reducing the work-week, the struggle against inequalities (and, notably, those which concern access to work and power).

But if more cohesion must be sought among the policies of the nations of the Common Market, it is nevertheless still appropriate--the second requirement--to accept the existence of pluralism and no longer pursue the chimeras of unification which have led to impasses. This "shattered Europe" must be considered as such, as a /sui generis/ organizational form which would gain nothing, in the end, by being subsumed into an international juridical mold just for the sake of its logicality.

FOOTNOTES

1. Special edition of EUROPEAN ECONOMY. Office of Official Publications of the European Communities. B.P. 1003, Luxembourg.

2. This analysis supports that of the review ECONOMIE PROSPECTIVE INTERNATIONALE, "The French Documentation," analyzed by Philippe Labarde in LE MONDE of 31 January.

3. Current president of AFEUR [French Association for European Studies]. This note was published in S.E.D.E.I.S. CHRONICLES of 1 December 1979 (44, Rue Francois-1er, Paris).

4. "Economic and Social Conceptions in the Community," LE MONDE of 26 January 1980.

9516
CSO: 3100

EEC INDUSTRIAL PRODUCTIVITY, ADAPTATION TO PETROLEUM CRISIS

Paris LE MONDE in French 12 Feb 80 p 24

[Article by Philippe Lemaitre on the Maldague report: "Future of the EEC: The Maldague Report: The Crisis Is No Laughing Matter"--passages between slantlines in italics]

[Text] The crisis which for 7 years has raged is forcing the industrialized countries to adapt their methods of production more rapidly than during the previous period, at a time, however, when the economic environment, characterized by declining growth, is clearly less favorable. The various countries of the EEC have responded with unequal success to the challenge. The first 15 years of the building of Europe favored the merger of the economic structures of the member states. Since 1973 this movement has been arrested, in fact reversed. The respective member countries have shown marked differences in their capacity for structural adjustment to the new deal in the international economy. /"The lead taken by some countries (Germany and, to a lesser degree, the Netherlands, Belgium, and Denmark), the instability which others have experienced, the retardation in Italy and the United Kingdom are so many signs of the fragility of the Community's cohesion."/ These perceived divergences could /"lead one to fear that the respective interests of the countries involved in the building of Europe are beginning to differ too much, and that the chances are growing for dislocation in a Europe moving at several different speeds."/

Such is the disturbing conclusion of a recent report on the evolution of sectoral instructures in the European economies since the oil crisis of 1973-1978 began, a report prepared at the request of the Brussels Commission, with its help, by a group of independent experts headed by Mr Maldague, the Belgian Commissioner of Planning (see also Pierre Drouin's article in LE MONDE of 7 February). The report provides a detailed inventory of the effects of several years of crisis on the Community. The authors, whose objective was to evaluate the performance of each country, nor to weigh the responsibility of the different "strategies of adaptation" adopted by the member governments. Nevertheless, one key idea underlies the whole of the report. It has been the countries which, in the name of defending their currency, encouraged improvements in productivity and

strict control of costs and parities which in the end best succeeded in making the necessary adjustments. Those which, on the other hand, thought they could give themselves a respite--postpone the problems which accompany adaptation to new methods of production--by accepting the erosion of the value of their currency and a higher rate of inflation, ran aground instead.

The report, which describes itself as simply factual, in fact looks more like a severe condemnation of the politics of "evaluationism," like a plea in favor of policies of dynamic change. Yet, the authors conclude that the European monetary system represents a /"first step"/ in the effort to exorcise the perils, the dangers of Community disintegration, which they throw into relief.

Three Factors

The process of adaptation of methods of production to internal and international demand is a continuous phenomenon which the crisis has only made more pressing. The report distinguishes three principal groups of factors which play a determining role in the orientation of European economic structures:

1. The EEC Dependence in Natural Resources and Especially Energy--The vulnerability of community commercial balances to the "oil effect" is leading many countries to contemplate possible recovery plans with caution.

2. The Determining Role of International Trade--The conquest of new foreign markets is necessary to compensate, both for the growth of the oil factor and for the weakness of demand. But this objective is all the more difficult to reach as international rules of trade have evolved with the appearance of new clients--the oil countries--but also, especially in Asia, of new rivals. In the face of competition thus exacerbated, /"the nature of the choices in export specialization or in type of dependence on imported products...seems clearly to be a critical factor in judging the capacity of each country to adapt itself with success to the new constraints."/

3. The Change in Costs and Parities--Accelerating inflation and floating currencies have affected all European countries since the beginning of the seventies. In this situation, two quite contrasted modes of action could be observed: on the one hand, a relative control over escalating internal costs and parallel with it the continuous revaluation of the currency; on the other hand, because of the higher rate of inflation, "bearish" speculation on parities.

/"It is in this domain especially, but also in that of better adaptation to world demand, that the most significant divergences appear, dividing the majority of countries in the old monetary 'snake' from the other countries of the Community..."/ This, according to the authors, is the

essential cleavage. The member countries whose structures at the beginning of the seventies enabled them to bow to the discipline of the "snake" and which believed it beneficial to remain in it, were constrained more than the others to clamp down on their increasing costs and to compensate for the higher value of their currency by striving for greater efficiency in methods of production. The need to maintain, indeed to improve, their competitiveness both internally and on the international markets led them, especially in industry, to maintain a high rate of growth in productivity despite the slowing down of activity. Thus West Germany, the Netherlands, Belgium, and Denmark, with industrial productivity averaging on the order of 4.5 percent per year between 1973 and 1977, significantly exceed the annual community average of 2.9 percent. On the other side of the coin, this has meant a reduction in industrial employment greater than in the rest of the Community. In sum, the countries of the "snake," by reason of monetary obligations freely undertaken, proceeded more quickly than others--beginning even before the crisis had reached full size--in the adjustment of their system of production.

Efficiency

The grand prize must be given to West Germany. To alleviate the commercial results of the continuous and steep revaluation of the Deutschmark (up 41 percent between 1970 and 1977 compared to the European counting unit), the German economy gave priority to greater efficiency in the utilization of the labor factor. Successfully: in most industrial sectors, the annual rate of growth of productivity between 1973 and 1977, was of the same order of magnitude, indeed superior to those of the three previous years (4.5 percent on average for industry, compared to 4 percent), while it sagged among the EEC partners. In addition, this effort at adaptation was not limited to industry: the gains in productivity in the services, but even more in nondurable consumer products and building, are spectacular.

However, this leading position is not absolute: in durable goods, according to the report, West Germany runs into competition from European industries which outperform them. Among the latter Dutch industry figures prominently, but Belgian and French industries are also in a good position. France was cited for its industrial machinery, precision goods, office supplies, and especially automobiles.

The high levels of productivity attained beyond the Rhine and the competitiveness resulting from it have facilitated adaptation of German exports to foreign demand. Of the member states of the EEC, it is West Germany which has most brilliantly performed in the rapidly expanding OPEC markets where, in fact, it was less favorably situated than the United Kingdom, France, or Italy.

The report also shows that, among member states, it is West Germany which has succeeded best in extricating itself from those of its activities most

threatened by competition from the newly industrialized countries. In this respect, it is the only EEC country which is in as favorable a position as the United States or Japan. In corroboration of the above, it remains in first place worldwide in exports of "high-density skilled labor products" (in 1977 its share of the market for those products was 20.6 percent, compared to 18.8 percent for the United States). West Germany is also the only rival to the United States and Japan in the most technologically advanced sectors, those where dominance has become, as the report emphasizes, /"a fundamental element of the power of the productive system."/ West Germany, with around 20 percent of the world market in "basic products," found itself in 1977 in a situation barely worse than it had in 1963.

According to the authors of the report, it is most of all because of their small size that West Germany's partners in the European monetary "snake," that is Belgium, the Netherlands, and Denmark, do not find themselves today in a situation equally favorable. However, in Belgium, where foreign investments have declined considerably, and in the Netherlands, (but not in Denmark) productivity, especially industrial productivity, is at a high level, which in the long run is promising. This is especially so for the Netherlands, which, in 1977, showed the highest relative levels of productivity in the EEC, with record figures for value added per employee in chemistry, metallic production, industrial machines, and electronics.

The situation of France appears mixed. Investment in modernization and technological breakthroughs, on the one hand, but, on the other, insufficient adaptation. France, under the influence of a currency detached from the hard currencies, has long delayed the business of adjusting the numbers of its professionals to the realities of international productivity. This adjustment is more difficult to make today in a mediocre environment.

Italy and Great Britain seem to be the counterproductive countries, but the plight of the second is more disturbing than that of the first. It was Italy which undertook a remarkable industrialization effort before the crisis, which allowed it to keep its exports at a high level. This production and these exports extend most often to technologically simple products. /"Less subjected to the constraints of competition than the countries of the monetary 'snake' and benefiting more from the productive efforts of the depreciation of its currency, it has not been led to modify its choices of specialization...but its vulnerability seems great, however, in face of the production coming from the low-wage countries..."/

British industry, finally, went into the crisis in a poor position. Since then, things have only gotten worse, despite its not inconsiderable strong points. /"The geographic orientation of British exports, the nature of the goods exported, the competitiveness of price which the devalued pound imposed, should have led the United Kingdom to redress a situation which continues to distinguish it from that of the great industrialized nations."/

The United Kingdom finds itself today in conditions of production which are no longer adapted to the norms of its partners.

INFLATION, FATAL TO PRODUCTIVITY

1977	EEC		West Germany		France		Italy		United Kingdom	
	1	2	1	2	1	2	1	2	1	2
Agriculture	2.4	100	4.3	98.9	1.4	101.1	2.2	76.4	2.1	128.9
Energy products	3.1	100	0.5	83.6	4.1	115.0	-2.3	149.6	7.4	80.5
Industrial products	2.9	100	4.5	112.3	3.4	110.2	1.9	80.5	0.3	80.3
Intermediate products	1.8	100	3.4	110.5	1.9	104.2	1.5	94.7	-0.9	70.5
Durable goods	3.2	100	4.7	107.4	4.3	125.1	1.3	81.1	-0.6	69.9
Nondurable consumer goods	2.8	100	5.3	132.6	3.4	100.5	2.5	73.8	-0.5	86.1
Food products	3.2	100	4.2	106.2	5.2	89.1	2.2	89.3	0.2	115.8
Building, civil engineering	0.9	100	3.5	146.4	2.5	95.5	-0.5	76.2	-1.9	76.2
Trade services	1.7	100	3.2	115.9	2.2	105.5	0.7	92.8	0.6	87.7
Nontrade services	0.5	100	0.7	115.2	1.5	104.9	0.6	92.4	-0.9	80.8
TOTAL	2.0	100	3.3	115.3	2.9	104.5	1.4	84.2	0.4	87.0

First column: Annual rate of growth of productivity (1973-1977).
Second column: Value added per employee (base 100, EEC average in 1970).

9516
CSO: 3100

BRIEFS

SOUTH AFRICAN COAL--The three Austrian power companies that are to get Polish coal as of 1983 for new steam power plants in east Austria--1 million tons annually plus an option for another 500,000 tons--now intend not to use that option quota but to import coal instead from South Africa to insure operation even in the event of Polish delivery bottlenecks. The South African coal has been offered by a FRG company, Ruhrkohle Handelsgesellschaft, which would import the South African coal via Hamburg and would bridge any delivery gaps with the aid of FRG coal. [Vienna DIE PRESSE in German 1-2 Mar 80 p 11 AU]

STARIBACHER TO VISIT AFRICA--Trade Minister Staribacher left for North Africa on 29 February to chair the following joint commission meetings: 29 February-4 March, fourth session of the Austrian-Egyptian Joint Commission for Economic and Technical Cooperation in Cairo; 4-7 March, second session of the Austrian-Tunisian Joint Commission in Tunis; 7-8 March, third session of the Austrian-Libyan Arab Joint Commission for Economic, Scientific and Technical Cooperation in Tripoli. These economic talks will be primarily for the purpose of a stocktaking of bilateral cooperation and its further intensification. [Vienna WIENER ZEITUNG in German 1 Mar 80 p 7 AU]

CSO: 3103

AIR FORCE CONSIDERS F 16'S, ALPHA JETS HIGHLY SUCCESSFUL

Brussels LE SOIR in French No 10, 11 Feb 80 p 8

[Article by Pierre Bary: "Initial Tests Considered Successful for the Air Force's F 16 and Alpha Jet"]

[Text] For the Air Force, 1979 and 1980 represent crucial years which will have seen two new types of plane placed in operation: the "F 16" fighter, the successor of the "F 104," and the "Alpha Jet," a twin-engine trainer which will replace the "T 33," and the "Fouga Magister." The older planes will not entirely disappear from our skies; about 20 or so of them will be kept primarily to allow pilots not assigned to squadrons to get enough flying time to retain their pilot status.

But the principal event of last year remains the introduction of the "F 16," the first of which were built on the assembly lines in Gosselies and then assigned to the Beauvechain base. It was planned that 18 of these planes (13 single seaters and 5 two seaters) would be delivered by the end of December 1979, but 4 of them did not arrive by that time, while three "F 16s" were already flight-ready for military use and one was ready for its first civilian test flight. For each of these planes, the average delay was not more than 23 days, which is not excessive considering the complexity of the tasks the two companies involved, Sabca and Sonaca, had to complete.

"Planning" Respected

This minimal delay did not prevent the Air Force from carrying out its "planning" for flights in 1979 and even from surpassing it. The First Wing logged 1,007.5 hours for 783 missions instead of 950 hours for 753 missions. And those figures do not take into consideration the hours flown by the two Belgian "F 16s" which, after inflight refueling, flew on to the United States, where they participated in tests which will continue through the first half of this year.

No one will deny that placing in operation this airplane, which the Air Force considers "reliable," and capable of a higher than expected

utilization rate, was not without its problems. This is the first time that our country has been involved in an international program being carried out in the United States with a view toward mass production. That means, throughout its manufacture, modifications are to be made to the units and to the engines which would affect equipment. A permanent dialog had to be set up with the U.S.A.F. as well as with the builder, General Dynamics, which made its documentation available at Fort Worth and provided at no cost a team of technicians which spent 6 months at Beauvechain.

A Difficult Reconversion

The task of reconversion, which had been begun in 1975, was immense. Pilots and technicians had to be sent to the United States to form the nucleus of on-site instructors. At the present time, 21 pilots have completed their training in the "F 16," among whom two-thirds were trained in Belgium. The number of retrained technicians has reached 240, of whom 153 were trained in Belgium.

The Air Force claims that at every level there is real enthusiasm for the "F 16," which as a weapons system offers possibilities unknown until now for aerial combat and ground maintenance. If the "F 16" is easy to pilot and is sometimes disconcertingly maneuverable, the Air Force nevertheless believes that, to fly this plane regularly, the pilot must be in exceptional physical condition and must maintain constant discipline. If those rules are accepted, adaptation is easy, since the pilot finds the "F 16" unique in its specialty, combat maneuvers.

No Surprise with the "Alpha Jet"

Another addition to the Air Force is the "Alpha Jet," of which 22 of the 33 planes which were ordered were delivered by the end of December 1979. Here the adaptation is faster and more spectacular. Thus, the retraining of the technical personnel which had been working until now on the "Fouga Magister," will be terminated by the month of April. At the present time, the supplying of 65 percent of the replacement parts has already been completed and will reach 100 percent by the end of the year.

From the technical point of view, the "Alpha Jet" has provided no unpleasant surprises. Its only grounding, which lasted for 2 days, was dictated by a breakdown in the hydraulic system which turned out not to be serious after the builder made the necessary adjustments.

In 1979, the 21 aircraft based in Saint-Trong logged 2,532 hours of flying time as follows: 210 hours training of instructors, 132 hours of training for support personnel and 1,310 hours for student instruction.

According to the pilots who are flying it, the plane lives up to expectations as far as speed, acceleration and range. It is very reliable also. First of all because it has two motors. And also because it is provided with emergency equipment and backup systems for the vital parts.

The Air Force still believes that there is no problem in adaptation for an experienced pilot, who can solo after one training flight. Nevertheless, the complete training program for instructors includes 35 hours of flying time.

The First Graduating Class

Next 22 February, the first class of pilots who have been trained on the "Alpha Jet," will graduate from the school at Saint-Trond. The 18 students who began their instruction in the new plane last 1 September had already complete 125 hours of flying time in the "Marchettis" and as many in the "Fouga." At the end of their program, they will each have 100 hours of flying time in the "Alpha Jet."

The first class was observed closely with a view toward learning something for the future. If no major difficulties came to light concerning navigation, night flying and landing, learning to fly by instruments was not always easy. That, they told us, comes from the fact of the plane's high maneuverability and its quick response to changes in the throttle setting and in the controls. These very precise instruments require great skill in piloting.

For the Air Force instructors, the "Alpha Jet" is a very useful piece of equipment, which has the merit of being simple, and this is a great advantage in the instruction and training period.

8956
CSO: 3100

CYPRIOT EDUCATION MINISTER REPORTEDLY SNUBBED BY ATHENS

Nicosia EIKONES in Greek 15-21 Feb 80 p 16

/Text/ The Greek government completely ignored Cypriot Education Minister Dr. Khrysostomos Sofianos during his recent visit in Athens. This scandalous and provocative attitude toward a member of the Cypriot government has been revealed only now following the return of Dr. Sofianos from his visit to the Greek capital where he went upon the invitation of the democratic mayor of Athens, Dimitris Beis, and the city's Free Open University. The Greek government insulted the Cypriot minister in a similar way in 1979 during one of his visits to Athens.

Dr. Sofianos returned to Cyprus on 6 February. The previous evening he had lectured at the Cultural Center of the Athens Municipality on the subject "Education and Social Reality" in the context of lectures which the Free Open University organizes. This, moreover, was the reason for his trip to Athens and no representative of the Greek government welcomed him on his arrival at the airport or wished him goodbye on his departure. The official authorities even avoided attending his lecture. Present at the airport were only a representative of the Athens municipality and Cypriot Ambassador Dimos Khatzimiltis.

The rector of Patrai University, despite the fact that he had asked the Cypriot government to extend the minister's stay in Greece by an extra day so that he could take part in the festivities the university had organized, sent word the following day that "due to heavy work we shall not be able to receive Dr. Sofianos and we ask him to visit the university some other time." What had transpired? It is believed that the Greek government had deliberately intervened in order to humiliate the Cypriot minister.

What does Dr. Sofianos say about this and how does he interpret it? The following statement of his could be considered as an indirect answer: "It would be very bad for the relations between Greece and Cyprus if I said what I believe. I don't want such a thing /to happen/..." Dr. Sofianos made this statement during an interview he gave to Greek journalist Giannis Dimaras during his recent visit to Athens. The interview was published in the 6 February issue of the Athenian newspaper TA NEA.

The Cypriot minister whom Dimaras had visited at the Hilton Hotel where he stayed is reported as having said also the following in response to relevant questions:

"Since childhood I have been a Makarios follower. I belong to the democratic camp. I am not a rightist. I am supported by a smashing majority of the Cypriot people and by all democratic groups."

/Question/ What is your opinion, Dr. Sofianos, about the administrative council of the National Union of Cypriot Students /EFEK/ in Athens?

/Answer/ I am ashamed that officially the Cypriot student organisation in Athens is represented by a juntist administrative council which does not hesitate even today and after so many misfortunes suffered by the Cypriot and Greek people to declare its trust in Grivas and EOKA B as well as in the coupists! The few juntists who prevail in the EFEK Administrative Council do not represent the student movement. I am certain that the student movement will itself find the way toward cleansing and complete democratization.

The above is reported to have been said by the Cypriot minister whose lecture at the Free Open University of Athens was enthusiastically applauded by the broad spectrum of the democratic world which was represented in various ways.

With regard to this matter the government issued the following announcement on 7 February:

"Concerning the articles published in the Greek newspaper TA NEA and which appeared also in Cypriot newspapers, the minister of education states that he did not give an interview to the Athenian newspaper but simply had a friendly talk with a reporter of the newspaper as he had also with other reporters. In any case, what was published in the newspaper does not reflect the exact content of the talk. Specifically, the article's reference to alleged statements by the education minister on the relations between Cyprus and Greece are absolutely unfounded."

7520
CSO:4906

BRIEFS

TURKISH ADMIRAL ARRIVES--The commander of the landing fleet of the Turkish Navy, Rear Adm Fuat Ugur, arrived in Famagusta this morning for an official visit to the federated state. He was greeted by the Famagusta district governor, Mr Tezcan, and the mayor of Famagusta, Mr Bora Atun. [TA080806 (Clandestine) Bayrak Radio in Turkish to Cyprus 1030 GMT 6 Mar 80 TA]

CSO: 4907

80 BILLION KRONER FOREIGN DEBT EXPECTED TO BE 100 BILLION BY 1981

Copenhagen MANEDS BORSEN in Danish Feb 80 p 17

[Article: "Foreign Debt Will Remain"]

[Text] Denmark's foreign debt is now at the astronomical level of 80 billion kroner and will probably exceed 100 billion kroner by the end of this year.

Since 1974 foreign debt has grown by 70 billion kroner. Up until 1978 private and public debt increased at approximately the same pace. Last year, however, business borrowing abroad increased greatly due to the poor domestic credit opportunities.

The record devaluation of the kroner has hit the economy very hard.

It is estimated that business and industry owe 52 billion abroad, or 15 billion more than at the end of 1978.

Correspondingly, the public sector owes 45 billion kroner, which means that total foreign debt has reached almost 100 billion kroner, but since we have a foreign currency stock of about 20 billion kroner our total net debt amounts to 80 billion kroner. The problem of the foreign debt can be illustrated by the following example:

On the average we pay interest of 10 percent on our foreign debt. This amounted to 7 billion kroner last year. This year, however, both interest and debt will increase. Due to the rising international interest level the average interest will reach about 13 percent, while at the same time the debt has increased by 20 billion. This means that this year we shall pay a good 10 billion more in interest on foreign debt, or more than 3 billion more than last year.

This year we shall have a deficit in our foreign trade of 8 billion kroner. Even if through a vigorous effort we should succeed in achieving balance in this area, the balance of payments deficit will nevertheless be in the area of 10 billion kroner. And balance in foreign trade would, for example, require an increase in the value-added tax from 20 and one-fourth to 30 percent. The debt will therefore continue to rise, and even with an economic austerity policy in coming years foreign debt will probably triple during the 1980's.

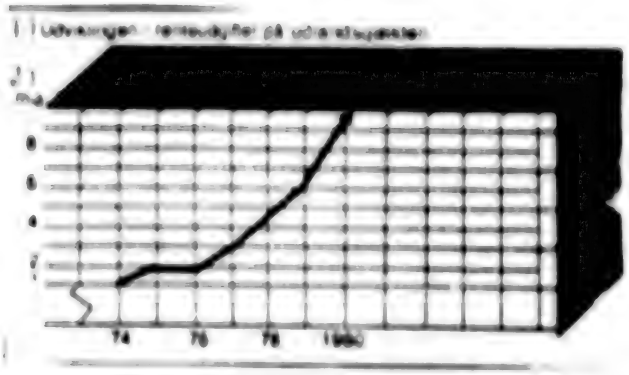

The interest payments to foreign countries have gradually become a great burden in the balance of payments.

Key:

1) Trends in interest costs for foreign debt.
2) Billions of kroner.

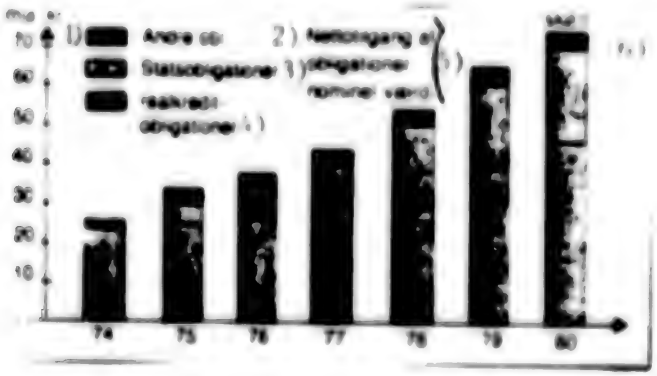

Key:

1) Billions of kroner
2) Other debts
3) State obligations
4) Mortgage credit obligations
5) Net increase of debts, nominal value
6) Assessments

RECORD BUDGET DEFICIT MEANS TIGHT CREDIT PICTURE

Copenhagen MANEDS BORSEN in Danish Feb 80 p 17

[Article: "Credit Market Held in Check"]

[Excerpts] Interest rates will not drop this year and credit restrictions not lessen.

It is the growing need for foreign borrowing and the record deficit in the state budget that extinguish all hope of the necessary easing of monetary policy.

In total, however, the need for borrowing will be so great that in the so-called temporary debt ceiling, which will be 10 years old in March, that we can look forward to many restricted years. The bond market as well will be badly off. Here the state's record-size financial deficit is the haunting element. The gross deficit will be at least 40 billion kroner and the net about 20 billion. The net deficit is to be financed through bond sales. Additional commercial credit bonds will amount to about 40 billion kroner, so that nominally a net of 75 billion kroner will be added to the market. In other words, there will be no lack of high interest paper, and this will prevent a noticeable drop in bond interest. So, because of the continued great balance of trade deficit and the state's record size financing need, Danish capital will be both expensive and scarce this year.

11256
CSO: 3106

BUDGET DEPARTMENT ISSUES FORECAST FOR 1980 FISCAL YEAR

Copenhagen NAERINGS ORSEN in Danish Feb 80 p 18

[Article: "Financial Austerity Inevitable This Spring"]

[Text] This year the deficit in the state's finances will be of record size. The state's expenditures for operations and for paying off debts coming due will exceed total income by at least 41 billion kroner. This amounts to 1 billion kroner more than last year, and 13 billion more than in 1978. The overall plan bears the main responsibility for the untenable development in state finances now being almost set in cement. Due to the elimination of the cost of living increments of 3 January and recalculation of cost of living increments, total personal income will increase by only 10 percent this year, not by the 12 percent originally anticipated. This will mean lowered tax income and less income from the value added tax.

The budget department expects the total source tax income to be 2.4 billion kroner less than estimated in the original finance law proposal. Normally, the state and the municipalities divide source tax income almost equally, but since the share of the municipalities in the anticipated tax revenue was agreed upon as early as in October, prior to implementation of the overall plan, the state must carry the entire burden of the income reduction.

The reduced wage increases will also increasingly put a damper on consumption, thereby reducing income from direct taxes. The budget department calculates that the overall solution will reduce private consumption by a further 1 percent. The value added tax and other fees will therefore provide .5 billion kroner and .6 billion kroner less, respectively, than anticipated. In total, the overall plan will reduce state income by 3.3 billion kroner, but since the state at the same time saves 2.4 billion kroner on the wage account, the cost of the overall plan will in reality be only .9 billion kroner. But this is enough, for the state had in advance budgeted an operational deficit of about 11 billion kroner. Now the deficit will be at least 12 billion kroner. To this must be added expenditures for bond purchases for the Social Pension Fund, plus payments on loans due.

The pension fund will spend about 5.5 billion kroner for bond purchases, payments on foreign state loans amount to .7 billion kroner, 7.3 billion kroner in government bonds come due, and finally the government must redeem about 14 billion kroner in government debt paper. In total, the state's capital expenditures will amount to a gross of 20 billion kroner, which, together with the deficit in operations, construction, and the lending budgets, brings the state's total deficit up to at least 41 billion kroner. This is a record. But what is worse: it already seems clear that the record will be even more convincing. The budget department assumes in the budget that unemployment will increase by only 10,000 this year. Everything indicates, however, that it will increase considerably more, and that therefore the budget department's estimated cost of unemployment compensation is altogether too low. The budget department expects that the number of unemployed will on the average be 175,000 this year, or 10,000 more than last year.

In recent years the increase in the labor force has been unusually large. In 1979 alone, there were 70,000 new job seekers. This year, calculated on a full time basis, the number will be at least 40,000. At the same time, employment in private industry will drop by at least 30,000 due to the low economic activity. The 70,000 must have incor- in the form of wages from the public sector, or in the form of unemployment compensation. It is estimated that 25,000 will be employed in the public sector, 10,000 will receive back pay, and 10,000 will take pensions. The remaining 25,000 will be unemployed. In any case, the public treasury will have to finance income and thereby assume the burden of supporting a further 70,000 persons.

There is therefore every reason to expect that the budget deficit will be even higher than the 41 billion kroner calculated by the budget department. Income support via the public treasury will this year as well cause total personal income to rise considerably more rapidly than the underlying production, thereby maintaining the almost chronic pressure upon the balance of payments. Not least against this background a new finance policy tightening seems inevitable.

11298
CSO: 3106

PRESS ON GREEN PARTY BADEN-WUERTTEMBERG ELECTION SUCCESS

DW171333 Cologne Deutschlandfunk Network in German to East and West Germany 0605 GMT 17 Mar 80 DW

[Press Review]

[Text] The key topic of editorial discussion today: The elections in Baden Wuerttemberg. To begin with a quotation from the daily DIE WELT: The results of the Baden-Wuerttemberg Land Diet elections do not allow any conclusions for the Bundestag elections in October, yet they mark an important milestone in the political process. With respect to politics on federal government level the strengthening of the FDP is significant. What is most interesting, however, is the dual result which simultaneously expresses the personal defeat of Erhard Eppler: The success of the Greens [ecological protection advocates] and the fact that Eppler failed to do better for the land SPD and for himself in his voting district than the result of 1976 which was miserable anyway. By his criticisms of civilization he turned out to be a trail-blazer of the Greens. This is the second Land Diet into which the Greens are moving. Now they must be taken seriously as the fourth party, last not least along the lines of a collecting pool of juvenile protest. The CDU, too, has every reason to ponder this development. Nevertheless, the CDU may be satisfied. Spaeth may chalk the safe absolute majority up as a personal success.

FRANKFURTER ALLGEMEINE arrives at the following conclusion: The Greens scored a remarkable success in Baden-Wuerttemberg. This is the most noteworthy result of the Land-Diet election. Besides, Minister President Spaeth scored a remarkable success--considering that the CDU/CSU has been on losing street since 1978 and an excessively high election success is hard to repeat. Eppler is now facing the question whether he will be able to run for his party in Baden-Wuerttemberg for a third time, especially since he, Green as he truly is, did not succeed in soliciting for his party Green voters in numbers worth mentioning. The fact that these voters do exist in a remarkable number is something to be heeded by the parties which cannot just be covered up by phrases about environment protection.

Freiburg's BADISCHE ZEITUNG writes: The actual political question involved in the Baden-Wuerttemberg Land-Diet elections was not whether the CDU would

retain its absolute majority. [illegible] The question of these elections was whether the Greens would succeed for the first time in a regular land (as different from a city state like Bremen) of the federal republic in moving into a Land Diet. The politicians of the established parties prior to the elections had answered this qualified flatly in the negative. The voters, however, have given a different answer now. Though their decision was a narrow one, it nevertheless is bound to have the effect of a signal to all parties which ought to alarm them--and not just in Stuttgart. What is more alarming than the appearance of a new group in the Land Diet is the fact that a considerable portion of the young people of the age groups between 18 and 24 years obviously no longer deems the other parties capable at all of coping with their problems. This is where the actual danger is to be found. Thus far BADISCHE ZEITUNG.

STUTTGARTER NACHRICHTEN makes the following comment: What has happened in Stuttgart was a nationwide political bang. For [illegible] politics the success of the Greens means that the established parties have reason to think. It may be doubted, however, that the Greens will accomplish much in the Land Diet and overcome their internal party confusion. The situation looks more serious to the politicians on federal level, for the SPD and the FDP have reason to worry. Their majority is threatened in the May elections in North Rhine-Westphalia, and for the Bundestag elections the rise of the Greens at the same time may spell the power-policy dawn of Franz Josef Strauss. If the Greens also jump the 5-percent clause clearly in the Bundestag elections, Strauss and the CDU/CSU would reach the absolute majority already with well over 47 percent. Strauss as chancellor--this has become more probable after this election in Stuttgart.

SCHWARZWAELDER BOTE stresses the following point: A thorough scrutiny of the 16 March election result probably will reveal that a remarkable shift in voters is underway which presumably will become plain again in the subsequent elections on 27 April in the Saarland, on 11 May in North Rhine-Westphalia as well as on 5 October in the Bundestag elections. For the crash of the established party landscape by the Greens has the effect of a signal for the following votes in 1980. The most important finding is this: The voter potential of the Greens presumably is much greater than indicated by the result of Baden-Wuerttemberg. The fronts between the parties have started moving, the erratic voters have become a new factor of German domestic policy. A strong minority of voters obviously has set its mind on changes. These are remarkable voter signals.

SCHWAEBISCHE ZEITUNG, which is published in Leutkirch, says in part: The Greens may be proud of their success. But then, they found the best starting positions in Baden-Wuerttemberg. The land with most universities and a lasting debate on nuclear power plants offered special key issues. As for the parties hitherto in the Land Diet, the entry of the Greens into the Diet is the greatest surprise as well as the most important challenge. Parliament may well gain from the Greens.

[DW171334] RHEINPFALZ OFLUDWIGSHAFEN maintains: The Stuttgart-success of the Greens will create waves that will reach to North Rhine-Westphalia where the social-liberal coalition will get into trouble. It will also bring influence to bear on Bonn, because it can be assumed that the Greens will have opened the door to the Bundestag a bit. This again creates new trouble for the free democrats despite the unexpectedly good result. The alarm bell has sounded for Hans-Dierich Genscher in Bonn, and thus also for Helmut Schmidt for whose coalition the Stuttgart elections may have been the beginning of the end.

NEUE RUHR-ZEITUNG of Essen writes: All people in the exemplary land Baden-Wuerttemberg agreed on one thing with regard to the elections: they cannot be considered a test of the Bundestag elections this fall because the political structures in the south-west cannot be compared with those in the federation. And yet there was a test election yesterday, a test for the Greens which certainly will have consequences going beyond the land level. Neither the strong action of Eppler on the Green meadow, nor the other handicaps compared with the established parties kept the Greens from taking the 5-per cent hurdle. That adds weight to the success. Most of all their moving into the parliament of a great land rather than their moving into the Bremen House of Representatives will bewing the hopes of the environment protectors. The traditional parties will be well advised to take even more seriously this new political force and its arguments.

AUGSBURGER ALLGEMEINE writes: Great analyzation work will begin now in the headquarters of the three established parties. The shot in the air in connection with the good success of the Greens in the European elections has hit a bullseye since yesterday at the latest. It must make the big parties ponder that such a heterogenous group as the Greens, without a functioning party apparatus and with far less financial means, from a standstill position, so to speak, have achieved more than 5 percent of the votes. It must be alarming for the SPD, FDP and CDU/CSU that it were probably most of all young voters who voted for the Greens and their unconventional appearance.

BRAUNSCHWEIGER ZEITUNG notes: Both big parties have an additional reason to be fearful. The Green signal flashes as a warning sign in many respects for the blacks and the reds. The fact that one third of votes for the Greens comes from young voters and another third from people who have not been voting before, is reason enough for the establishment to take the latent displeasure with the CDU/SPD/FDP party state more serious than before.

KOELNISCHE RUNDSCHAU maintains: Now one must take the Greens into consideration. It is open whether they will be successful in North Rhine-Westphalia because they are quarrelling very much here, and because the electorate at the Rhine and the Ruhr as far has shown little understanding for political outsiders. But the Greens will have a say in other Laender and in the next Bundestag elections.

WESTFALENBLATT of Bielefeld writes: The gains of the Greens went at the expense of Erhard Eppler's SPD. That is a devastating result for a man who

used every opportunity to castigate his chancellor and the SPD with growth fears and energy scenarios. Eppler himself involuntarily showed the growth limits to his party and to himself. As of now it will go downhill.

HESSISCH-NIEDERSAECHSISCHE ALLGEMEINE of Kassel stressed: This hour is particularly bitter for Erhard Eppler. He has taken into consideration what the opponents to nuclear energy and the environment protectors claim for themselves. It did not help his SPD, however, it was only detrimental for it that he had opposed Helmut Schmidt. Eppler is facing a heap of shambles.

HANNOVERSCHE ALLGEMEINE ZEITUNG notes: The SPD is the party that is the last to be confident with the result of these elections. What other land party of the Social Democrats had a candidate such as Erhard Eppler with his environment theses and anti-nuclear-powerplant slogans, Eppler who was a candidate too close to the Greens in battle of the Baden-Wuerttemberg Land association? He did not score any gains for his party with this program. In addition his opponent Lothar Spaeth was less known and he had less of a reputation than his predecessor Filbinger. Eppler did not know how to make use of that either. As a consequence of this election Eppler's future as a leading figure of the left SPD wing could be at stake now.

CSO: 3103

PROGRESS OF FDP ELECTION CAMPAIGN ASSESSED

Frankfurt FRANKFURTER ALLGEMEINE in German 7 Mar 80 p 12

[Article by Thomas Meyer: "Let Genscher Fix It"]

[Text] Bonn, March—For several weeks now there are fewer spaces available in the parking lot in front of Thomas-Dehler-Haus, the Bonn FDP headquarters. Reserved spaces are available for the secretary general and a handful of others. The reason for the lack of space are three large and ugly prefabs which are to alleviate the shortage of room inside the headquarters through the campaign up to 5 October. As these temporary offices clearly show, the FDP feels that the race for votes is now on in earnest. For that matter, every election is a fight for survival for this smallest of the three established parties. But this time around it seems that the FDP is not really scared to death, politically. The party may not be behaving as if it didn't have a care in the world, but it cannot detect any serious danger signals, at least as far as its survival on the Bonn level is concerned. It has plans for the campaign, it has programs and, above all, it has Genscher. The FDP is intent on presenting its top candidate to the public as a man without whose approval and participation nothing can be done in this country.

The FDP leadership believes that Genscher's popularity has been further enhanced by recent world events. The campaign in Baden-Wuerttemberg thus far has given the FDP additional grounds for optimism. When Genscher spoke on the market-place of Goeppingen at noon recently, 2,000 people came— a surprising number which FDP campaigners do not normally draw.

Genscher not only represents his party to the outside; he has increasingly been setting the tone on the inside as well. The party chairman has never been one for working out programs of one kind or another— and he is the first to admit it. Decisions with all sorts of ramifications taken at party conclaves are not his forte; he leaves that to others, like Lambsdorff and Baum. But the closer the campaign gets, all eyes in the party begin to turn to Genscher as one who can both fight and motivate. And when lower echelon party members came looking for advice, a smile from Genscher or a witticism often did more good than all the subtle talk of this or that theoretician.

But Genscher knows that his charisma and his impact on the party don't simply drop into his lap from on high. He has to work hard for it. Over the past few months, for example, he visited almost all the Land organizations of the FDP, an effort that went largely unnoticed.

Posters— But No Telephone Receiver

The campaign is beginning to take more and more of his time. Genscher, the only FDP politician whose posters will be appearing countrywide this year (minus the obligatory telephone receiver), has almost 70 campaign dates scheduled in Baden-Wuerttemberg in between trips to Kuala Lumpur, Rome and Paris. It will be much the same in the Saarland and above all in North Rhine-Westphalia, to say nothing of the Bundestag election campaign. Just the same, Genscher all by himself does not personify the FDP and even less those who vote for it. There are several reasons for the relatively carefree attitude of the party leadership in this election year. There is unanimity —by no means a matter of course among Free Democrats— not only at the top, but in most of the Land organizations as well. In Baden-Wuerttemberg, where the first elections will take place, there is a great deal of satisfaction over the broad consensus within the party for its Land chairman Morlok. As for the changing of the guard in Duesseldorf, the FDP can heave a sigh of relief the more so since Bonn observers feel that the new team of Mrs. Funcke and Hirsch are working out well.

All the same, North Rhine-Westphalia still is the FDP's Achilles heel. Accordingly, the forecasts are somewhat guarded in view of the unpredictable size of the "Green" vote. From the vantage point of Bonn, however, the assessment of this particular Land election has been revised, because of world events among other things. The outcome in the largest state is no longer considered an unconditional test case for the Bundestag election. A bad or even a catastrophic showing in Duesseldorf does not spell the end in Bonn as well, they say at FDP headquarters.

And when they speak of an improved starting position for 5 October they are also referring to a change in the FRG's internal climate which had not yet emerged by the end of last year. Afghanistan plays a part in this, but not exclusively. The nomination of Strauss to head the CDU-CSU ticket was supposed to lead to an extraordinary confrontation between the two great blocs and to a kind of super-duel between Schmidt and Strauss— but neither has happened so far.

This has affected FDP strategy. For a time, the party was afraid of being ground down in the course of this confrontation. The slogan "FDP or Strauss" was almost in the nature of a last resort gambit. The new slogan is "Courage To Be Free - Courage To Assume Responsibility." Some months ago, the FDP's

fears were many; they were afraid of TV debates which would just show the chancellor and his challenger. Now, the Free Democrats feel they are in on things all along the line. The FDP ascribes this, among other things, to the rather unimpressive state of the CDU-CSU and, in its view, to the vague image cast by Strauss as a candidate. To be sure, the "new Strauss" has been a disappointment to some of the FDP leadership who must now do without the emotional issues they hoped to introduce into the FDP campaign. Those who thought of portraying "wild man Strauss" as a kind of archenemy of the FDP also included secretary-general Verheugen.

7.5 Percent Or More

Demoscopically, the FDP has no reason to worry. A poll conducted by the Allensbach Institute in the last half of January gives the FDP 7.5 percent of the vote countrywide and other polls are said to be even more favorable. It is worth noting, however, that there is a marked north-south differential--which was clearly borne out by the Allensbach poll. Putting the customary question: 'if the Bundestag election took place next Sunday...' this poll gave the FDP about 9 percent of the vote in northern Germany; about 8 in North Rhine-Westphalia; about 7 in the Rhine-Main area and southwest Germany, and about 6 in Bavaria.

The FDP leadership thus has reason to believe that this Bundestag election might well be decided in northern Germany, particularly as far as its own chances are concerned. The assumption is that there is a voter reservoir in these areas which is dissatisfied with Strauss as a CDU-CSU candidate. The FDP intends to draw the necessary consequences and to try and satisfy the hoped-for opening in the market. The results of these regional surveys have buoyed up FDP hopes the more in view of its recent heavy losses in the Hamburg and Lower Saxony elections and its poor showing in Schleswig-Holstein.

9473
CSO: 2103

COLUMNISTS ANALYZE SOVIET IMAGE, INTENT IN AFGHANISTAN

Reasons for Soviet Intervention

Paris LE FIGARO in French 21 Jan 80 pp 1, 4

[Article by Annie Kriegel: "The Face of Power--Why Has Moscow Struck in Afghanistan?"--passages in slantlines originally published in italics]

[Text] After 3 weeks of Soviet operations in Afghanistan, is it possible to catch a better glimpse of the Kremlin's intentions? Let us first of all review the four interpretations which up to now have to greater or lesser extent enjoyed the support of commentators.

1. /A dispute within the Politburo,/ where the "hard-liners" prevailed over the "soft-liners" including Brezhnev. It is a kind of "masterkey" explanation, but one which is unshakeable: at all events, nothing is really known for certain at the moment about deliberations at the highest levels in the Kremlin except their effects. The health of Brezhnev? Post-Brezhnevism? One simple common-sense reflection: if the Soviet Union is prepared to take such initiatives with an invalid Brezhnev at the end of the line, what will it do with a Number One in good health?

2. /The fear of an Islamic Contagion:/ This is the fashionable idea, though an idea which is itself fragile to the extent that the condition of Soviet Islam is rather problematical, even if one does observe signs of a certain reawakening of the faith in each of the great religious groups; to the extent also that the Soviet republics in Asia are by no means exclusively Muslim; to the extent, above all, that the center of power in the Soviet system, the Communist Party, has taken great care not to allow itself to be split by regional or ethnic particularities: there is no federalized power. From any point of view, this theory simply has not met the burden of proof with facts, since all information is consistent as to the composition of the units sent to fight in Kabul: as a whole these soldiers originate precisely from Soviet Muslim provinces. This is a curious way of providing against the risk of any contagion: sending Muslim soldiers to fight Muslim rebels.

3. /The result of a mistake./ The immediate costs of the Soviet intervention appear in fact increased: it confirmed the reawakening of American opinion and increased the Carter administration' ability to respond; it threw away the possibility of the ratification of the SALT II accords for a period well beyond the 1980 presidential elections; it brought American-Chinese rapprochement to a more concrete stage; it has for a while destroyed the "natural" character of the alliance of the nonalined with the socialist world; it destroyed the "automatic majority" at the United Nations; it restored in fact if not in speeches American-European solidarity; finally it reanimated between Egypt and Saudi Arabia the sense of the need for them to jointly and publicly take responsibility for the interests of the Arab world, where only Syria, South Yemen, and the Palestinian PLO sing a chorus in support of the coup of Kabul.

Facing such a heavy balance-sheet, is one forced to believe that the Soviet leaders made a mistake? Error being human, could it not also be Soviet?

It is nevertheless implausible that such old hands as the septuagenarians of the Soviet Politburo should not have foreseen such forseeable consequences. It seems thus, for the moment, to be a sound procedure to investigate first whether there may not be, to compensate for these costs (which are moreover of greater or lesser durability), the expectation of an immediate and considerable gain, before we conclude it was a mistake.

4. /A Testimony to Weakness./ Far from being a freely calculated initiative, the intervention was made necessary by the approaching collapse of the Amin regime, and was more of an escape forward than a demonstration of force. The idea is seductive: however, it was never said, by contrast, that the United States, reduced to doing nothing in Iran was itself in a position of strength. Let us thus be suspicious of these Soviet weaknesses which express themselves in the unfurling of men and weapons beyond its borders. After all, if it were a question only of the Amin regime and the stability of Soviet ascendency over Afghanistan, nothing prevents us from thinking that the Soviets disposed of both political and military means less showy than the type of intervention they settled upon.

We do not imagine, in fact, that since 1978 the Soviets have freely allowed the Afghan revolution to follow its own course. It is obvious that Amin displeased them for three reasons: he took Taraki's place and shot him without authorization and just when Taraki had returned from being embraced by Brezhnev; he conducted, quite needlessly since power had been solidly consolidated, an absurd policy of frantic socialization, the same kind of ultra-leftist and demented policy as that of Pol Pot in Cambodia; his aggressively modernizing atheism finally made impossible any harmonization between the Iranian and Afghan revolutions. But one could kill Amin without bringing in an entire army: as to the war against Muslim guerrillas, the least that one can say is that they had till spring to take drastic measures to oppose them.

In sum, the true question to pose does not seem to be: "Why did the Soviets intervene in Kabul in the form in which they did?" This public, spectacular,

gaudy form, but above all this style which is no longer simply a strong style, has been putting in place over the last 3 weeks, without a moment's respite, a gigantic army which would be useless of itself if it were only a question of keeping Afghanistan.

So what? So one must return to geopolitics: in Afghanistan, the Soviets are not hiding themselves behind anyone, neither Afghans nor Cubans, nor Palestinians, nor East Germans; they are no longer hiding behind political or military advisers, behind educational or economic development, or medical consultants. They are unmasked, and with the face which they want us to see in this new phase of socialist expansion: the face of power, in its most naked form, military power. And if this is happening in Afghanistan, it is because Afghanistan has only one asset, but it is a fantastic one: its position overhanging China in the East; the Indo-Arabic South; and Iran in the West. Which of these directions will be most useful? There is a question to which the Soviet leaders avoid giving an answer even among themselves, for while they have to prepare for all eventualities, they do not necessarily have to create them.

Problems of Soviet Occupation

Paris LE FIGARO in French 23 Jan 80 pp 1, 5

[Article by Paul-Marie de la Gorce: "The Russians Caught in the Trap"]

[Text] Is the Soviet Union in a fair way to lose the game in the Middle East and throughout the Arab world? One would already be tempted to answer in the affirmative, to listen to the commentaries harping on the USSR's diplomatic defeat in the United Nations, on the violence of the reaction in most Muslim countries, on Moscow's isolation. But one cannot put one's faith in perhaps transitory climate [of opinion], and the problem posed is to know whether and how the Soviets can overcome their present difficulties.

This is so first of all for Afghanistan. Moscow must first of all be assured of its control of the country. It is the first time that the Red Army has confronted guerrillas. It is thus a new problem for the command levels. No doubt they prepared themselves for it: but that does not guarantee its success. By any hypothesis, success implies control of the borders with Pakistan and Iran, the object being to interdict foreign assistance to the rebellion which, no one seriously disputes, does have support bases, at least in Pakistani territory. Also one would predict that Soviet divisions will be deployed the entire length of the frontiers: but the length requires large numbers of troops, and assuming that practical dispositions can be made (mine-fields, barriers), it is a very heavy burden that the Russian army will have to bear--and failing to do so would be exposed to the indefinite persistence of the guerrilla.

In the interior of the country, the problems for them are no less great: the terrain is extremely favorable to the rebels, as they are not looking for heavy engagements where they would not stand a chance. One must not, though exaggerate their chances. For their contacts with the outside,

their provisioning, and their relations with the population, they must stay concentrated indefinitely in the mountains. The goal of the Russians thus would be to control the valleys on which depends the existence of the entire country, and this, however costly it may be in numbers of troops, is probably not beyond their means.

But the main thing remains, as always, the attitude of the people. There is no reason to doubt the consistent and multiple indications of the hostility of the majority of the Afghans to the Soviet military presence. This hostility may even seem insurmountable. It is sufficient in principle to condemn to isolation and impotence the partisans or sympathizers of the pro-Soviet regime. Because the latter exist, one must not forget. Not long ago they were strong enough to execute the 1978 coup with the decisive help of the young officers of the Air Force.

But since then they have endured dramatic tribulations. First of all their attempt at social transformation violently split Afghan society, the most traditionalist, the most closed, and the most religious of any. Next they tore themselves to pieces to the point of transforming their quarrels into bloody settlings of accounts. And they must today endure the handicap of being linked by their compatriots to a foreign intervention.

In reality, Babrak Karmel is nearly in the situation of Janos Kadar taking power in Budapest thanks to the intervention of the Red Army:

Kadar, surmounting the frightening conditions in which he started, ended by presiding over a relatively flexible political period, and more or less supported by the Hungarians. Will it be the same for Karmel? In truth everything depends above all of the military success of the Soviets and on the elimination of the rebellion--and Afghanistan is not Hungary, either geographically, or strategically, or in human terms.

What is most serious for the Soviets is not, however, the situation in Afghanistan. It is the reaction throughout the region which most preoccupies them. Apparently, reaction is universally hostile, like that of the majority of nonaligned countries. The Soviet Union sees itself condemned by the majority of states between the Indian and Atlantic Oceans, there precisely where international crises give it the greatest means of acting against western positions. What, then, can it do at present?

It is in Iran that its Kabul intervention did the most serious damage to its prospects. The reaction there was almost unanimously hostile. Even the "students" occupying the American Embassy condemned the USSR, and Mr Bani-Sadr, candidate in the presidential election and reputed for his "anti-imperialism," accused the USSR of wanting the dismemberment of his country. This could only strengthen the position of the most anti-Soviet elements of Ayatollah Khomeyni's entourage, the position for example of Sadeq Ghotbzadeh who even in the days of Neauphle-le-Chateau dreamed of running relations with Washington. A picturesque episode was significant in this regard: a dispatch, probably false, having announced that the Soviet charge

d'affaires in Mexico had declared that the USSR could help Iran in case of American attack, the Ayatollah Khomeyni, far from showing his gratitude, immediately came out of his seclusion in Qom to berate Moscow and denounce its aggressive intentions.

From all evidence, the tactic of the communist Tudeh Party, consisting in "clinging" systematically to the policy of the ayatollah, even though implemented with skill and tenacity, has not borne great fruit...The Soviet Union can still count on the fierce determination of the extreme noncommunist left, even those most hostile to the Tudeh, to pursue their "revolution" and to prevent it from skidding into a reconciliation with America. And above all the hostage affair continues to support tension between Tehran and Washington.

There remain, in turn, serious reasons for the Soviets to hope that the hostility they must face in the Near East will not remain permanent or unanimous. And this applies naturally to the Arab-Israeli conflict. The countries of the "Firmness Front"--Algeria, Libya, Syria, South Yemen, and the PLO--have already met in Damascus and carefully avoided condemning Moscow unilaterally, maintaining their more fundamental opposition to the policy of the United States--considered the principal enemy. In reality, their position only reflects the feeling which remains very widespread throughout the region and which consists quite simply in keeping in the forefront what seems the most immediate and pressing, that is, the confrontation with Israel.

It remains no less true that the cohesion of the countries that met for the Bagdad conference--that is against President Sadat's policy--has been ruptured and that in the Afghanistan affair Saudi Arabia, Iraq, and the Gulf states have had nearly the same reactions as Egypt. To the degree that the Soviet Union could play the supporting role to states hostile to Camp David, and by that means, act indirectly but influentially in the region, this is a worrisome sign for them.

Yet its adversaries would have to know how to exploit it. The United States finds itself in a miraculously strengthened position in the Middle East. The long and complex maneuvers going on for months to charm the Islamic countries into opposition to the Soviet Union* above all to change the course of the Iranian revolution has finally brought results: not exactly those which were hoped for from the hostage affair with Tehran, but others, much more important, by reason of the vast reactions aroused by the Soviet intervention. We see today--as all drama has an element of comedy--American experts taking a deep interest in the ambuscades of the passes of Kandahar and those in the passes which lead to Peshawar, like young English officers at the end of the 19th Century freshly posted to the Army in India...But this will not be of much use if American policy does not exploit the present circumstances. Two conditions would be necessary to do this: that the hostage affair be resolved, but nothing indicates that this is

*Cf. "The Afghan Lever" in our editions of 3 July 1979.

imminent, and that the Israeli-Arab crisis be moving toward a real solution. If the Egyptian vice-president, Mr Mouserah, went to Washington precisely to convince the Americans of this, past experience counsels great skepticism on this point.

It is perhaps because of this that the Soviets can hope to retrieve one day their possibilities of action in the Middle East. It is as true in politics as elsewhere that one can count often on the mistakes and weaknesses of the enemy...to make up for one's own.

Implications for European Security

Paris LE FIGARO in French 22 Jan 80 pp 1, 4

[Article by Alfred Fabre-Luce: "Kabul: To Divide the West?"]

[Text] Last week, while the money markets abandoned themselves to panic, we heard some curiously optimistic commentaries. The Afghan affair was, according to Claude Chesson, a "sign of weakness" of the USSR (Let's hope it does not give us too many such signs of weakness!). It was said also that the USSR had undergone a great defeat at the United Nations and that Europe, through its Council and its Assembly, had demonstrated its unity of views. It was concluded that the Kremlin had underestimated the indignation provoked by its military expedition and that Brezhnev must now answer the hawks who had "outvoted" him: "You see, I was right to be against."

In reality, no one knows what happened or what is happening now in the Kremlin. But as far as giving free rein to the imagination goes, one can as well suppose that the invasion of Afghanistan was, beyond its local justifications, designed to demonstrate the loyalty of Soviet Muslims, the impotence of the United Nations, and the divisions within the West. And if this calculation was made, we cannot yet say it was wrong.

In Afghanistan, the USSR is proceeding brutally, by attacking customs and religion, as it did within its own borders under Stalin at the time of the purge of the kulaks. However, it did not fear to use Muslim Soviet soldiers. The latter are probably conscious of bringing with them a more highly evolved civilization, where usury is unknown and women are no longer oppressed. The "empire" has thus not "burst"; it is, on the contrary, extended. The hopes aroused not by Helene Carrere d'Encausse but by the title her editor chose, seem, for the moment, premature.

Outwardly, governments theoretically "nonalined" and citizens who claim to be free have already taken refuge in equivocation. It was only with difficulty that we were able to hear an interview broadcast in French of Mrs Ghandi. The transmission was poor and warped by echos; but these echos seemed to repeat ironically the sentences where she tended to concede Soviet justifications. Sunday evening, on Europe 1, the reflections of Mr Benyahia had the same sound. The Algerian minister of foreign affairs told us that Algerian policy was "very clear." But he also said it was situated in the "penumbra."

In France, the PCF has thrown off its mask, we are told. But this was already said in 1939 at the time of the German-Soviet Pact. We are thus watching new lines in an old tradition, which, right after World War II, prompted Maurice Thorez to declare that the members of his party would perhaps not resist an invasion of the Red Army and to say to General de Gaulle that the communists were not "to the left, but to the East." This old obedience had been presented to us since then as coming from periods of aberration between the periods of anti-fascist solidarity or of Eurocommunism which eclipsed it. It appears today that we had taken the exception for the rule, and the rule for the exception. Nothing in the way of proof is lacking today, not even the alinement of Aragon. His recent contrition, pathetic but prudent, will only have lasted a few years.

The USSR has just shown once more that it believes it has a right to intervene in countries where communists are in power.

The previous coup which had installed them in Kabul had been justified in the statements of the PCF orators by the feudal character of Afghan society. But the word "feudal" is also currently employed by the same communists when they speak of French society. They so designate the owners of large companies which, according to the PCF, the government obeys. One is at a loss to see why this subjection, and the catastrophic consequences which (still according to the PCF) result for the French people, would not eventually justify an analogous intervention. By virtue of this reasoning, if the PCF controlled the government of Paris, it would believe itself to have the right to appeal to the Red Army, and Moscow would believe itself justified in responding favorably to the request. We should never forget this ultimate perspective.

The PCF showed its independence in the Czech affair? That was not of much consequence, since after having disapproved of the occupation, the PCF had endorsed the "normalization." But above all, the great game had not yet begun. The revolutionary situation created by the crisis of capitalism--at least that is what Moscow calls it--subsequently arrived. The Kremlin and the PCF are in agreement on exploiting it.

All this is serious. But my major concern is different. However powerful may be the PCF in France, it could do nothing if it were not supported by fellow travellers. Certain of these friends are overtly or implicitly declared. The PSF says that it is going to present an independent campaign platform and that it hopes to acquire on this basis part of the communist votes. But any government it could form to accomplish this program would only be viable with the parliamentary support of the communist members. Thus the dependence it tries to show it escaped by renouncing the "Common Program" would continue in the future National Assembly. Also, one cannot take Francois Mitterrand seriously when he appears to deplore our government's weak stand on the Afghan affair. He may have to be much more complacent than Giscard d'Estaing and Raymond Barre eventually, or suffer a reversal of alliances he does not want.

the Kremlin also finds support, albeit less obvious or less conscious, among others. I include among these all those--and they are unhappily quite numerous--who maintain the stance of denouncing the two superpowers equally. Certainly America must take some of the blame for the international monetary disorder; but if we speak of military intervention, one must go rather far into the past to reproach the United States. In recent times we have seen on the contrary American military abstention in the face of provocations such as the Cuban adventures in Africa and the events in Iran. The comparison is thus shaky.

We have had for close to 15 years--to be precise, since General de Gaulle's journey to the East which inaugurated "detente"--a tendency to translate our respect for the growing power of the USSR into terms of idealism. It has created for itself missiles, many tanks, and a great navy. We came to Helsinki and imagined we could believe in its goodwill. There is, I fear, a relationship between the series of events. Let us continue the story. The dispute over the Olympic Games is another example. Good arguments can be made against the boycott, but this is not the place to renew the mystification of Helsinki, not under present circumstances. Listening to the president of the Olympic Committee, one could believe that the Moscow Games would be a free meeting of youth leading to hopes for peace--in the capital emptied for this occasion of all "suspects" and where visitors would be putting their independent interlocutors in danger, if they can find any.

The Afghan affairs must be placed in its international context. The USSR, disappointed by the delay in ratification of the SALT accords, and led into a miscalculation by several years of Western passivity, deployed in Afghanistan a massive force destined to impress the world as much as repress a rebellion. This occupation has had greater impact than the Prague occupation had in its time. What has happened is that in the meantime the world has shrunk. The illness of Tito, even though it probably creates no immediate danger, has been considered, in public opinion, as an omen highlighting the interdependence of the dangers. The artery of the old Marshal reminds us that we too have a vital artery, in the East, which could be blocked. The rapid Russian mobilization against Afghanistan devalues the timid proposal to withdraw Soviet troops from Eastern Europe presented in the autumn by Brezhnev. A split is glimpsed in the free world between the opinions of the maritime countries and those of the continental countries. All this puts into question the security in which we think we live.

The danger is worldwide, but for us at present the field of useful action, in response, is [italics] Europe [end italics]. This is what I will try to show.

9516
CSO: 3100

POLITICAL FIGURES VIEW IMPLICATIONS OF AFGHANISTAN INVASION

French Foreign Policy Implications

Paris LE FIGARO in French 23 Jan 80 p 2

[Article by UDF Senate Foreign Affairs Committee Chairman Jean Lecanuet; "Allies, but Nonaligned"]

[Text] France's foreign policy protects the interests of France.

These interests are purely national when it is a question, for example, of protecting our jurisdiction, of selling the products of our companies, of signing agreements which allow French scientific and cultural diversity to be recognized.

But France is also a power. Its national interests are inseparable from its role in international life and in the service of peace. It must maintain its rank and make its voice heard.

Whether it is a question of our national interests or our responsibilities as a great power, French foreign policy is therefore decided in France, in Paris, by the president and the government. The postwar period is dead and gone: we get no more credits, arms, or instructions from across the Atlantic.

This basic position must not however hide the essential: we stand by our choice of the Atlantic Alliance for our security, and thus our decision to be loyal allies of the United States.

When the balance between East and West is jeopardized, when human rights are threatened, when the agreements on which peace has rested since 1945 risk being put into question, the interest of France and that of the West are inseparable. There should be no doubt on this. We have chosen sides, without equivocation.

The solidarity of the free world does not require, however, that France follow along with the decisions of the American president. For us, each

of the allies must participate in the formulation of joint decisions. A partner has no weight unless he freely decides his position and can influence that of his partner. We intend to be a substantial partner. Not a "satellite."

This especially explains why France retains control over the utilization of its nuclear deterrent force.

But the Americans well know that the usefulness of our cooperation rests first of all on our economic reality, on our military power, on our political links with Europe and Africa. They must therefore understand that, in certain circumstances, France will have a different position from them.

When the Americans use the dollar to protect their economy, even if we understand this policy, we do not agree that it is the basis of the international monetary system. This is why we have created the European monetary system, and it is possible and desirable that France should take new initiatives in this field.

It is for the same reason--not to be a satellite of American economic power --that France supports the building of Europe. Europe is therefore one aspect of an independent French foreign policy.

We also have our own conception of detente. For us, detente is not a by-product of a division of the world between the great powers. Detente must be global: the USSR cannot create by its military intervention in Afghanistan the most serious tension and pretent to preserve detente throughout the rest of the world. Detente must correspond to a policy of peace, freedom from hegemony, and the propagation of the democratic ideal. Detente and cooperation with the Third World are thus also for France a means of preserving its identity and affirming its independence.

If I wanted to sum up, I would say that we are allies of the United States, but not alined with it. The alliance must rest on two equal pillars--equal now in principle and some day also in power--the United States of America and the European Community. It is France's part to develop, as it has done since 1974, its own military capacity. It is Europe's part better to assert its personality and its power.

Detente, East-West Relations

Paris LE FIGARO in French 23 Jan 80 p 2

[Article by RPR National Secretary for Foreign Affairs Jean de Lipkowski: "The Cliche of Detente"]

[Text] In the present international crisis, we do not have to be "behind" anybody, nor do we have to "get back in line."

We have to make our own sovereign decision in accordance with our principles and our interests.

The Soviet resort to force in Afghanistan has violated one of the fundamental principles which inspired the diplomacy of General de Gaulle: respect for national independence, that is the right of each people to determine for itself its own destiny.

This excludes all foreign intervention in the affairs of another state.

All the world today proclaims this principle to condemn--justly--the Soviet attitude.

Let us congratulate ourselves on this unanimity while realizing that once upon a time the Gaullists were singularly isolated when they condemned, in the same spirit, United States interveation in Santo Domingo and above all in Vietnam.

Confronted today with a manifestation of Soviet imperialsim, France should avoid pretence and refuse to cover up the truth.

To say for example that the Afghanistan affair is not a manifestation of the East-West conflict but rather reveals a tension between the USSR and the Third World constitutes an alibi for accepting this injustice in hopes of preserving our tranquillity.

In effect, the upshot of such reasoning is that Europe is not concerned.

If it is true that we have security interests in Europe in common with the USSR, this is not a reason to accept the Soviet breach of its commitments made at Helsinki which rule out, notably, the recourse to force in relations between nations.

Let us cease in any case using the cliche of detente for all purposes no matter how irrelevant.

The best way of preserving detente is to reject breaches of the principles on which it is founded. Detente is incompatible with the resurgence of blocs and with any policy of aggression.

French-U.S., USSR Relations

Paris LE FIGARO in French 23 Jan 80 p 2

[Article by PS National Secretary for International Relations Lionel Jospin: "Don't March in Step"]

[Text] The military intervention of the Soviet Union in Afghanistan is an unacceptable attack on people's rights. It is a blow struck at detente and

it adds to tensions in a world already unstable enough. This is why the PS immediately and vigorously condemned this operation.

I will even say that we were surprised by the softness of tone and the slowness of reaction of the French authorities in this affair. To the point that we asked ourselves if what we were seeing was the embarrassment of a government which is itself interventionist, as in Chad, or Zaire, or the Central African Republic (for it is always difficult to condemn...a colleague). Some even suggested that the hidden motive of internal policy--somewhat contempuous--might have been to strengthen the temptation to flatter a bit more a PCF more prompt to divide the left than weaken the right.

We must henceforth follow closely the developments in this affair. The USSR can stick to the concept of a "big policing operation" which it conducted to restore calm to one of the southern borders, intimidate Iran, and avoid the possible fall of the Amin regime to the rebellion. In this theory, the Soviets can show themselves intelligent and effective by pressuring the regime of Babrak Kermal into a political compromise with the rebels. They can be narrow and brutal and be swallowed up in Afghanistan. But in any case they will go no further. The other theory is that the USSR is miscalculating the balance of international power and seeks to pursue its advantage by a war of conquest. It would break therefore with the policy of the "peaceful" status quo, of the Brezhnev era, and destroy detente. It is certain that, in this case, France could not manage its own security affairs in the same way. We should examine all the theories and prepare ourselves. But let us not deceive ourselves by choosing too fast.

Must we close ranks behind the United States? But in fact, behind whom? Carter or Kennedy? Connally or Reagan? The United States or the presidential candidates? And in the name of which policy? I am of a generation (that of age forty) which learned in the light of Vietnam, Pinochet's Chile, the Iran of the Shah, Somoza's Nicaragua, that the United States could itself be as dangerous for peace and democracy and that, on the list of attacks on the rights of citizens and peoples, Afghanistan and Czechoslovakia do not stand alone. In the world such as it is, one has to mistrust crusades. Especially when one or the other of the two great powers has already proposed to carry the torch.

France is in the Atlantic Alliance and our intention is to remain there, at least so long as there is no better means of security. But we should remain there not just to march in step, but to make our voice heard. One must clearly understand that the United States, in the present situation and hampered as it is in the Iranian affair, is defending above all its interests as a great power. Must we boycott the Olympic Games because America wants it, or suspend the supplying of manufactured products because it freezes its wheat exports? I do not believe so. We should not be more hostile to the USSR than the premier Western power which itself will always have ways to achieve the basis of an overall compromise with the USSR.

It is not by huddling like chicks around the American hen--especially as the latter already prods us too much in commercial and financial matters--that countries will show the USSR that they are firm and united.

The problem is thus less that of closing ranks behind the United States than of helping to diminish the ranks behind the USSR. This is what resulted from persuasion at the U.N. and among the nonalined at the time of the massive vote disapproving the intervention in Afghanistan. At the time when the Soviet leaders--because of their own ideas of their country's power interests and of the stability of their vicinity (Afghanistan obviously, but perhaps also Iran)--present themselves with their first great conflict with a country of the South and thus potentially with the Third World itself, it is perhaps unnecessary to make of this too quickly a new East-West conflict.

Let us firmly condemn all those who attack the principles on which the international community must be based. Let us struggle against the dangers of returning to the Cold War, among other ways by maintaining the willingness to cooperate bilaterally with the Eastern countries. Let us remain committed to dialog with all countries or all movements which in the East, the West, or the South reject the confrontation of the blocs. Above all let us work on solutions to the great problems of the decade, hunger, the new demographic pressure, the need to create vast internal markets and political and social democracy in the Third World. There is something worth more than lining up behind somebody.

We should leave it to no one to speak for us, especially if we have the determination--this is the case with the Socialists--to do so with firmness and reason.

9516
CSO: 3100

STRATEGIC DOCTRINES OF U.S., USSR VIEWED

Paris DEFENSE NATIONALE in French Feb 80 pp 5-20

[Article by Georges Outrey]

[Text] Do the two superpowers have sufficiently similar views of the use of their nuclear arsenals to give rise to arms-limitation agreements? Therein is a major problem which becomes particularly acute when one questions whether the SALT II agreements will be ratified. The author of this article attempts to compare the two strategic doctrines, or at least what can be learned about them from American documents. In this regard, he concludes that neither side can change the profound nature of the nuclear weapon. It continues to be potentially a weapon of massive destruction, and deterrence retains all its force.

The United States and the Soviet Union face one another on opposite sides of the polar arctic region. Each has a nuclear arsenal which enables it to strike the other on its own soil. Therefore, these two countries have a common interest: to not mutually destroy one another. Such a symmetrical situation at the geographic and materiel levels, however, is not enough to assure that they are in positions of reciprocal deterrence. It is also necessary for them to share sufficiently similar ideas about the use or nonuse of nuclear weapons for them to have what is called a "shared rationality."

For a long time, the Americans have not asked themselves the question. For them, the matter was self-evident, for they did not believe that anyone's rationale could be different from their own. In 1977, Paul Warnke, director of the Arms Control and Disarmament Agency (ACD), spoke in a deprecating manner about the "primitive" aspects of Soviet doctrine. For several years, however, they have been attempting to better understand the ideas of their partner. Many elements of Soviet doctrine thus have become accessible through translations of official documents, of books intended for Soviet officers. There are also studies prepared by American specialists. In France, this is still an unexplored area, at least publicly. Therefore, it is very interesting to attempt by this means to get an idea, of what the Soviets are thinking, to make a comparison with American doctrine, which is easily accessible, at least as regards the major principles.

However, such an undertaking is full of pitfalls. We do not know whether the translations are accurate nor whether the translated documents are effectively real working documents of Soviet officers. They can be instruments of "misinformation" skillfully placed to deceive us on the real doctrine. The American studies themselves are not free from ulterior motives. When one makes use of documentation, whatever it may be, one never knows whether he himself is an unknowing instrument manipulated by secret pressure groups. Also it is necessary to examine the coherence of the ideas presented, at first internal coherence of systems of ideas, but also coherence with all we can learn about mentalities and material accomplishments.

The Profound Mentalities

The American Mentality

The Americans, heirs of "founding fathers," have a kind of general and vague religiousness which results in the placing of great importance on problems of a moral order. An old vestige of puritanism makes material success the reward of the just, which in part explains the troubled spirits caused by the defeat in Vietnam. From the "frontier" days, they have retained a heritage of violence; however, the middle classes, which are great in number and solid, with a preponderant protestant ethic, are committed to commercial activities. They feel that this violence is no longer conceivable. Conflicts between men of goodwill should be settled by negotiations during which a compromise is reached in which everyone finds satisfaction.

Militarily, this country is an "island." None of its land borders is threatened. Thus it has been able to retain the British defiance of all permanent military institutions with the idea, which already had been intimated in Washington's farewell address, that any war being conducted outside its territory does not threaten the existence of the nation and, therefore, is by nature limited. As Francis Bacon said in the 17th century: "Whoever controls the sea has great freedom and can wage war as much or as little as he pleases."

For a long time, the American army was the instrument of the "manifest destiny" of the nation, which was to span the continent from one ocean to the other. Its forces were very small and on the eve of the Civil War were not in excess of 16,000 men. After 1890, the year in which the Indian wars ended, with the navy, it became the instrument of a foreign policy which was initiated in 1853 with the opening of Japan under the pressure of Commodore Perry. However, the two world wars changed all that. The armed forces were then the nucleus of a military effort engaged in by the entire nation, a massive but temporary effort.

After 1945, the United States found itself confronted by a new situation. It became a power having international interests and responsibilities,

which imposes upon it a military apparatus which is at once large and permanent. It also perceives that its own security is at stake, not only from a direct strategic bombing. "It cannot count on the strength of its allies to gain time to enlarge the base of its industrial production, to mobilize and position its forces, to learn how to conduct the war by profiting from the mistakes of others and to change the tide in its favor."[1]

The American prewar budget of 2 percent of the GNP increased to 6 percent. The financial and economic imperatives became of utmost importance, for it was necessary to assure a long-term, effective defense which would not ruin the country. A new category of individuals now became a force in public opinion. These were the scientists who during the war participated in the fabrication of the atom bomb or worked on "operations research," in conjunction with university professors, particularly those who were specialists in international relations. Some of them are to be found in research and study organizations such as the "Rand Corporation"; some of these organizations are working for the armed forces, often having even been established by them. Thus, in the civilian sector, they constitute a "community defense" many members of which are driven by a strong feeling of guilt for the role they played in the creation of the nuclear weapon.

At the same time, the military wishes to improve its public image.

Eisenhower spoke of the military-industrial complex. Dissensions between the navy, army and newly-established air force broke out into the open and culminated in what was called the "revolt of the admirals," when the construction of an aircraft carrier was canceled 4 days after it was placed on the blocks. American strategic doctrine thus was forged from an extraordinary mixture of influences and pressures of all kinds. One might say that it was born "of the marriage of the scientist and the financier. The professional military man was shunted aside." (Doctor Pipes)

Of course, the Pentagon has not remained disarmed nor passive. Each branch has a solid pressure group. The chairman of the Joint Chiefs of Staff is a consultative member of the National Security Council. However, the military had to reckon with currents of thought and opinion and had their own lobbies as well as representatives very highly placed in the political world. Not the least of these was Mr McNamara surrounded by his team of young Turks who invented the rationalization of budgetary choices and gave the top military chiefs a rough time.

The Soviet Mentality

Since the Golden Horde, Russia has lived in insecurity. It has been able to attain its place in the sun only by jostling its way among turbulent and avid neighbors, Mongols, Germans, Poles, Swedes and Turks. The Russian peasant has survived only by employing ruse when he was weak, force when he was strong, and in the latter case, not using force is for him a sign of

hidden weakness. For the Marxists, every agreement or commitment has always been the result of a balance of forces, which can only be at the expense of one of the two parties.

The Soviet Union, like the empire of the tsars, is a continental state. Its borders are fragile. It has need of a very strong and very centralized government, supported by an army which is at once the guarantee of the regime and the nation. It cannot forego expansionism which gives it protective buffers occupied by vassal states that it must control. Every war can be nothing other than total war, for it threatens the very existence of the country.

The Red Army, which became the Soviet Army in 1946, has a dual heritage: a revolutionary heritage and a heritage from the former imperial army transmitted by the many officers integrated in 1918 by Trotsky. Of this imperial army, it has retained the privileged role of the artillery, the use of great masses, a certain amount of neglect for logistical problems and a tradition of intellectual activity. The Soviet soldier has remained what the Russian soldier was, with his extraordinary qualities of endurance, his capacity for suffering, but also his faults: passivity, unconcern, disorder and lack of initiative.

Soviet military thinking takes place at three levels the highest of which is military doctrine: "a system of officially approved and scientifically based principles concerning the fundamental problems of war." (Marshal Sokolovski) Military doctrine is translated into principles of action which are established at the highest political level, the Politburo of the Soviet Union's Communist Party Central Committee. Military personnel were missing from this organization from 1957 to 1973, from the elimination of Joukov to the admission of Gretchko. At present, Marshal Ustinov, minister of defense, a civilian specializing in arms industries, is a titular member of it, after having been an alternate member at the 25th Congress in 1976. However, as Mme Renata Fritsch-Bournazel says in the magazine, POUVOIRS: "Although the presence of the minister of defense has thus been filled for a continuous period of 5 years, this does not mean, however, that the high command is a real, autonomous force; i.e., homogenous 'pressure group' vis-a-vis the Party. It is rather a process of integration during which the military has associated itself more closely than in the past with the making of political decisions and is serving simply as an instrument of execution, without the increased influence of the military in the Soviet society's meaning an abdication of the political power held by the Party."

In the area of doctrine, military men, therefore, continue to be strictly dependent on the civilians in the Politburo. On the other hand, they have a near monopoly in the sectors of military art, general strategy, operational and tactical strategy and military science. The latter, which takes the form of study, thought and intellectual construction, permits discussions and debate. Military science is the subject of considerable effort in many Soviet military schools and academies and results in the conferring

of university degrees upon officers. It always has reference to Marxist-Leninist doctrine which it quotes frequently; this makes Soviet military literature particularly indigestible.

The Doctrines

The American Doctrine

At first, American military men saw in the nuclear weapon a new military resource like any other, which simply required determination of the particularities to better make use of it. This led them to the Bikini and Eniwetok tests. The U.S. Air Force, which had carried out the strategic bombing of Germany and Japan and which was very disappointed with the survey, by the name of U.S. Strategic Bombing Survey, saw the atom bomb as a way of giving this kind of war its effectiveness. At the same time, various currents of thought were being produced by the Lilienthal Commission, the Baruch Plan, etc. In a study published in 1946 by Yale University, Bernard Brodie wrote: "Until now, our military institutions had the objective of winning a war. From now on, their principal objective is to avoid one. They can have no other useful objective."

The Truman-MacArthur controversy over the use of the atom bomb in the Korean War made Americans think about the strategic and political situations which justify the use of the bomb, rather than the technical and tactical conditions. The situation in Europe caused the first formulation of the concept of deterrence, which was implicit in Brodie's words. With NATO having been revealed as incapable of establishing the conventional "shield" planned in Lisbon, President Eisenhower issued the so-called "massive reprisals" doctrine.

American doctrine is being constructed in the course of the years and events. Deterrence gives it a kind of moral comfort of which Schlesinger defined the nature and ambiguity well: "In the 1950's, several nations of the Western Alliance, including the United States, made a discovery which at one and the same time intrigued and suited them. There was a phenomenon called deterrence which was without pain as it produced an effect without going through the disagreeable need for having the slightest person seriously ready to do battle. What is more, something which was even more miraculous, it was shown (or at least it was believed) that deterrence did not cost as much as a classical defense system."[2]

The way the Americans saw it at a certain point in time, deterrence in fact had the major defect of placing too much insistence on the result it was seeking: the nonusage of nuclear arms. By doing so and ruining the credibility of usage, deterrence did away with its own foundation. The risk which was out of proportion to the stakes caused the deterred to renounce his aggressive intent. American intelligentsia was confusedly aware of this and sought to recover this credibility. Hermann Kahn spoke of "thinking the unthinkable." An effort was made to avoid the "all or

nothing" dilemma by various methods such as the "graduated second strike" of Gen Maxwell Taylor. But it was then recognized that the thought of never having to fight was a dangerous illusion. As Schlesinger said: "Most of those who are seriously studying the question realized this when the nuclear predominance of the United States disappeared. Deterrence is not a substitute for a system of classical military defense. The means of this system representing the potential needed to conduct an effective counteroffensive are an essential condition of deterrence. This common sense truth becomes particularly evident in the event of crisis, when forces which were created for deterrence alone find that they lack credibility, as much for the adversaries as for their potential users."

Schlesinger, therefore, does not condemn the idea of deterrence but integrates it in a complete system whose resources constitute a "trinity": strategic nuclear forces, theater nuclear forces and conventional forces.

Each component of the trinity must serve as a means of deterrence vis-a-vis the adversary's resources of the same kind; however, the components mutually complement one another to cover the entire spectrum of possible threats, without there being a breach which the enemy can exploit. Nuclear deterrence properly speaking, the kind of nuclear deterrence which is founded on massive reprisals through the use of an anticity or antiproperty strategy is based almost exclusively on a force with a high survival capability which at all times is kept in reserve in order to deter a potential adversary from taking any act of coercion or desperation against the population and economy of the United States and its allies. This survival capability resides basically in SSBN missile-launching submarines. The rest of the strategic forces constitute a second strike force to permit the hitting of the adversary's nuclear weapons or his military forces thanks to precise missiles having weak explosive power, so as to limit so-called "collateral" damage. Based on the use of ICBMs and bombers, the second strike force is designed to give the political authority a spectrum of strategic choices avoiding response to an attack by anticity reprisals. That is what Schlesinger's "limited nuclear options" are called, or his "no-cities strategy."

In the sector of theater nuclear weapons, the situation is much less clear-cut. We have the impression that the present disposition of forces in Europe is above all a heritage from the period when, with the Davy Crockett, the tactical nuclear weapon was considered a superartillery. The old question of the neutron bomb, or "enhanced radiation weapon," was revived to reinforce the deterrent effect of theater nuclear weapons "by combining improvement of their effectiveness with an increase in their acceptability to the allies.... Our nuclear weapons in Europe are there for deterrence, and this is rendered credible by a credible capability to wage war." (Schlesinger)

Apparently Schlesinger's successors have not changed this doctrine. In January 1974, Harold Brown[4] stressed "the primary function as a symbol of deterrence" of theater nuclear weapons permitting a choice in the nuclear

sector, without recourse to nuclear strategic forces. However, Brown adds, "Their range at present is too short to hit 'peripheral' attack forces; their number is too high to consider them merely an escalation instrument." Moreover, although the nuclear threat to Europe has always existed, it was recently modernized by the placing in service of the SS-20 missile and the Backfire bomber. "We can try to deter the nuclear threat," Brown said. "That is why we must have some reprisal capability against distant objectives located in the interior of the enemy (deep targets); and we must determine whether arms control can be used to limit this threat."

That, in the eyes of the American government, justifies the installation in Europe of Pershing II missiles with a range of 1,500 kilometers and the SALT III negotiations including European nuclear weapons. However, we are uncertain about two important points: the vulnerability of American ICBMs until the MXs are put into service and the doctrine of theater arms usage, caught between "forward strategy" and "graduated second strike."

Between the two wars, the Soviets never succumbed to the theories of strategic bombing dear to Lord Trenchard and Douhet designed to bring the enemy to his knees by massive air bombings destroying his economic, industrial and demographic potential, driving down the morale of the civilian population and ruining the administrative and governmental structures. The results of the U.S. Strategic Bombing Survey supports them in their doctrine which is at one and the same time that of Clausewitz and Jomini: a war is won by the destruction of the enemy's organized forces and occupation of his territory. They are reinforced in their ideas by people like Professor Blackett[5] who calculated that during the war Germany had received the equivalent of 400 bombs of the Hiroshima type without there having been a crumbling of the German people's will to fight. Blackett also recalled that 48 hours after the Hiroshima explosion, trains were moving normally; and factories reportedly were able to resume production in less than 1 month. Elementary civil defense precautions would have reduced losses of human life considerably.

Between 1953 and 1957, a new school seems to have been born. General Talenski maintained that the advent of nuclear payloads and thermonuclear payloads in particular changes the nature of war. At the time, some political speeches, such as those of Malenkov, seemed to take Eisenhower's tack to the effect that a nuclear war would mean the end of civilization. Talenski's position led to a violent reaction in military sectors which looked upon deterrence as a threat to conventional armies. Dr Pipes thinks that one of the reasons for the downfall of Stalin's successor was his lack of military orthodoxy. His principal rival, Khruschev, on the other hand, made use of the army's discontent; and the principal offensive was led by Zhukov [Joukov] who became minister of defense. It was he, from 1955 to 1957, who redefined the principles of Soviet strategy, with total rejection of the American theses and the idea of an absolute weapon.

In 1962, Marshal Sokolovski wrote his book, "Soviet Military Strategy," which was republished in 1968. From 1962 to 1972, an entire literature

flourished which constituted the "officer's library." With would-be scientific stringency, the doctrine which these documents express is linked with Marxist-Leninist doctrine and its conception of war. For Lenin, war is a sociohistorical phenomenon which has two basic aspects. The first is sociopolitical. It expresses the profound nature of the phenomenon which derives from the class struggle. Wars, Lenin says in substance, are a historical phenomenon. They are tied to the period of existence of a society of exploiters. They are based on private property and the division of society into classes. The transition of capitalism to communism will take an entire historical era. Until it is completed, the exploiters will retain a hope of restoration; and this hope will be transformed into initiatives [tentatives]. As a result, the armed defense of the victories of the revolution are an objective necessity and a logical element of the construction of socialism and communism.

The second aspect is military-technical. It is second with respect to the first. By definition, everything concerning a weapon falls within its purview. A weapon cannot have any intrinsic virtue as the American doctrine leads one to suppose, a doctrine which is the product of "idealism" and metaphysics. Nothing in the military-technical aspect can impact on the sociohistorical aspect.

Therefore, there is a permanent risk of violent collisions between two antagonistic systems, even if the emergence of new forces can contain bourgeois adventurism. Capitalist societies will probably become all the more aggressive as they feel their backs against the wall. War will then be worldwide and intercontinental. All resources will be used, including nuclear resources.

If war is possible, it must be won and won totally. It must not be the mere defeat of the enemy but his destruction. It is not a question of deterrence but of victory. Mere "good enough" is unacceptable; superiority is required, not reprisals but offensive actions. Instead of conditions of usage in the sociopolitical sector, the Soviets are, therefore, induced to study these in the military-technical sector. They then observe that there is a revolutionary change in the art of war which is due to the introduction en masse not only of the nuclear weapon but of new devices, missiles, vehicles, electronics, etc. Resulting therefrom is a complete change in the scale of military action: "One of the characteristic traits of a future war will be its enormous spatial scope. One of the decisive characteristics of the military objectives pursued by the two adversaries will result in the war's being conducted not only in the zone of contact but, in essence, on the entire territory of the belligerent coalitions, for the two parties will seek to completely disorganize the rear areas of the other." (Sokolovski)

At the same time, action will be infinitely more rapid. For the first time in military history, the highest command echelon will have the means of directly producing the destruction effect which it previously sought by

successive efforts. The nature of the operational command and that of the tactical commands has been profoundly changed because of this. There is no longer anything but a single gigantic operation conducted at a very fast pace. Tactical-operational nuclear weapons are placed directly under the orders of the highest operational command echelon and are its principal means of destruction of the enemy's organized forces, destruction which is followed by the occupation of his territory.

Colonel Sidorenko, in his book, "The Offensive," describes the way things would happen. Action would begin by massive nuclear strikes the entire depth of the enemy's disposition and determining the axes of effort of extremely mobile conventional forces, armored and mechanized, which, moving from dispersion to concentration, would exploit the destruction produced as rapidly as possible. If the war becomes intercontinental, "missile troops with the strategic designation" will go into action. They "constitute the basis of the military power of our armed forces.... (They) are made to annihilate the enemy's nuclear attack capability, the important concentrations of his armies, military bases, to destroy his military industries and disorganize the political and military structures of the aggressor, at the same time as his airplanes and means of transport." (Gretchko)

Soviet military thinking seems to be marked by a few simple principles. The first is preemption. From the Great Patriotic War, the Soviets have retained the vital necessity of not being surprised. However, they say that they do not wish to start a war. For them, everything would begin with a crisis during which enemy preparations would make apparent the need for getting a jump on the aggression.

The Soviets are also obsessed with the need for possessing an enormous quantitative superiority. This is an old heritage from the imperial army. Next comes the essentially antiforce nature of their doctrine. "It was not so much the economic plight and exhaustion which caused the defeat of Germany as it was the armed conflict and the defeat of her armies." (Sokolovski) To accomplish this, they believe in the combined use of weapons and resources. They reject any recourse to a single kind of action; this caused them to develop their five armies in a balanced manner. This idea is also to be found at the operational echelon. Sidorenko shows that each army has its place, by receiving a mission of its own, complementary to that which is assigned to the other branches. Nuclear weapons will not be used in support of units in contact of battalion or company size, this role being reserved for the classical artillery. Nuclear weapons "should be used in all cases to destroy the most important objectives."

The Soviets also attach much importance to civil defense. If war is possible, then precautions must be taken in consequence thereof. A vice minister of Defense is responsible for civil defense. It seems that important efforts have been made to construct shelters and conduct drills.

However, it is probable that the effect sought is to safeguard the maximum number of cadres and technicians needed for the restarting of industry and the economy, to handle the struggle activities which would follow a nuclear exchange. This is the conception of a long war.

The principal result of this doctrine is to have all categories and resources developed in a balanced and massive way. The wealth which results therefrom will permit modification of the strategy depending upon the circumstances or ideas which predominate. Between 1960 and 1970, it seems, according to Joseph Douglass,[6] that a change was initiated to separate the European theater from intercontinental nuclear war. The Soviets are currently stressing the dangers of a general nuclear war.

Since 1970, they seem to be going further in an effort to secure from the Westerners promises of "no first use" of nuclear weapons during a conventional European war. It was observed[7] that for 7 years Soviet military newspapers and magazines have dealt with almost exclusively conventional operations under nuclear threat; however, it seems that new impetus has been given recently to the study of the offensive use of nuclear weapons and their effects. It is true that Soviet units are equipped and trained to cross areas which have been contaminated by nuclear explosions and also by chemical agents. An American study in 1977 brought up the possibility of the Soviets' neutralizing various enemy installations by chemical agents until the arrival of powerful decontamination agents, which would permit them to make use of a relatively intact western Europe that could be indispensable to a devastated Soviet Union.

Such an analysis seems to justify the statements of those who say that the United States is seeking above all to avoid war and that the Soviet Union is concerned with what it takes to win one. It is true that one side has a deep repugnance for the use of nuclear weapons and that the other tends to look upon them as a military resource just like any other. In the SALT talks, it is probable that the Americans will seek above all to assure the stability of deterrence, the Soviets to improve their strategic superiority.

However, we can well believe that each of the two superpowers is being careful not to take one of the two extreme positions. In the case of the Americans, this reportedly led to the position taken in September 1979 by Kissinger, the new Sicambre of the nuclear age, burning what he adored and ruining all real detente. On the other side, the word deterrence does not exist among the Soviets where they speak about "oustrachenie," "the inspiring of fear"; however, the idea is nonetheless present, as shown in Brezhnev's speech in Tula on 18 January 1977: "Our efforts are directed precisely toward avoidance of the first strike and the second strike and, in fact, nuclear war in general. Our view of things can be defined in this way: the defense potential of the Soviet Union must be at such a level that it will deter anyone who attempts to shatter our peaceful life."

The essential difference resides in the very idea of strategic doctrine. For the Americans, it is an explicit intellectual construction, invented

by civilians who base it on psychological and mathematical theories such as game theory. The Soviets refuse to have a doctrine of this kind, for it seems to them made of abstractions and derived from idealistic" minds. For them, deterrence is an implicit effect which ensues from possession of a powerful tool of war, of a "war fighting capability[8], which provides the means for winning the war. For them this deterrence above all envisages the use of strategic weapons. Basically, they are seeking to avoid general nuclear war.

Although there are important differences in conception between the two superpowers, they nonetheless have a certain amount of "shared rationality." this common interest which is not to destroy each other. This produces a blocking of major conflicts, particularly in Europe, which is the only region of contact between the two great economic and political systems which divide the world. Therefore, it is essential, in situations of crisis, that each of the two parties knows the language and the manner of reasoning of the other so as not to have a misunderstanding over gesticulations. That is one of the principal interests of the SALT talks.

This blocking has the basic purpose which was stated recently by McGeorge Bundy[9], former assistant to a United States president, on the major characteristic of nuclear weapons, which the specialists too often ignore: "By their very nature they are weapons of massive destruction.... At times we forget that Hiroshima was selected as an objective of military interest and that the bomb exploded 100 meters from the targeted point.... We Americans know from statements reiterated by our military leaders that our strategic plans are centered on military objectives; however, we also know, from an unclassified report, that a strategic reprisal strike against objectives would result in the launching of 60 missiles against Moscow."

When nuclear weapons are used, even small tactical nuclear weapons, a great step toward escalation is taken. There is a change in the nature of the conflict. The two superpowers are well aware of this, no matter what political and strategic talks they have at one and the same time in the face of the world. Therefore, nuclear deterrence continues to be a perfectly valid idea. The use of nuclear weapons as a means of massive destruction, in an "anticities" or "antiproperty" strategy is always possible, even though it may seem improbable. Its consequences are too serious for us to disregard.

FOOTNOTES

1. Schlesinger, report to Congress, 1975.

2. Report to Congress, 1975.

3. See DEFENSE NATIONAL, December 1979.

4. Statement to Congress on 25 January; see SURVIVAL, May-June 1979.

5. Professor Blackett was a respected adviser of the Royal Air Force and the Royal Navy on operations research, particularly convoys crossing the Atlantic.

6. Joseph Douglass, "The Soviet Theater Nuclear Offensive."

7. C. N. Donnely, senior analyst of the Soviet Studies Center of the Sandhurst Royal Academy, quoted in MILITARY REVIEW.

8. See Benjamin S. Lambeth, "How to Think About Soviet Military Doctrine" (February 1978), Rand paper series.

9. McGeorge Bundy, conference at the International Institute for Strategic Studies in London, published in the November-December 1979 issue of SURVIVAL.

8143
CSO: 3100

STATUS OF TRADE WITH USSR OUTLINED

Paris L'USINE NOUVELLE in French 24 Jan 80 p 36

[Article by Marie Sellier: "USSR: the 100 French Contracts"]

[Text] At a time when the United States is boycotting the USSR, trying to win over its allies, what is actually going on in our trade with Russia?

"We have no intention of changing our trade relations with the USSR," a government spokesman recently affirmed. Solidarity with Washington, yes, but not alinement. The USSR's fifth largest Western supplier (after the FRG, Japan, the United States and Finland), France does not seem to want to give by so much as an inch.

What is more, it is continuing to step up trade. Thus negotiations on the terms of the new supplementary five-year Franco-Soviet agreement are now going on in Paris. On the whole, the precedent has just been established with dash. The objective was attained (even, it is claimed, exceeded): As planned, trade has trebled in comparison with 1970-1974. From 1965 to 1979 trade increased seven times over, 1976 was a record year for French contracts (6.8 billion francs) and, while gloom marked 1978 (a ten-percent drop in exports to the USSR), the results in 1979 are encouraging (growth of 40 percent for exports, surplus trade balance of 992 million).

Nevertheless, let us keep our feet firmly planted on the ground. The USSR is only France's tenth largest customer and Franco-Soviet trade does not weigh very heavily (two percent) in the balance of French foreign trade. After all, the competition is rugged because, aside from the Germans and the Japanese, we have to reckon with the Italians and the English, who are close on our heels.

Precisely what does our trade with the USSR consist of? Unlike the United States, 80 percent of whose exports to the USSR are farm products, 60 percent of French exports involve products of greatly added value: capital goods (40 percent), semifinished metallurgic products (tubes and special steels) and inorganic chemical products. In return, the USSR supplies us

with oil (about five percent of our imports), oil products, natural gas and coal.

For the most part, contracts signed with the Soviets fall within the framework of the five-year supplementary agreement which provides for assorted credit terms at preferential interest rates (7.55 percent for contracts involving from 20 to 400 million, 7.2 percent for those over that). Furthermore, in the majority of cases clearing agreements are the rule with firms committing themselves to buying a given volume of locally manufactured products.

Lengthy and Delicate Negotiations

During the past five years, 95 contracts have been signed. Probably about a hundred are being negotiated, some of them even for a very long time now, for one has to be patient and wait a minimum of three years, often more. In connection with this, the contract SODETEG [Technical Studies and General Enterprises Company] came away with in 1977 (see below) is typical. It took 10 years of negotiations before it was signed. A slow process which explains the number of defections.

Some projects tend to be buried; others melt away like snow in the sun. Then some are surrounded by an aura of secrecy, as seems to be the case with the Citroen project for the construction of an automobile factory, which is referred to only with guarded words.

On the other hand, the contract Speichim is about to sign for the construction of a plant for the production of methionine by means of Rhone-Poulenc process (800 to 900 million francs) or the Caspian Sea drilling platform projects (ETPM [expansion unknown]) are referred to with greater certitude.

Among all the contracts signed, we find particularly the big names, but the small and medium-sized businesses are also there. Witness to the fact are the 25 French manufacturers of machine tools grouped together into a coordinating committee in Moscow who managed to do some business in 1976-1977 and, furthermore, have no intention of leaving it at that.

On the prize list of firms best off in the Soviet market, three firms are front runners. At the top of the list is TECHNIP [expansion unknown] which, aside from the big contracts acquired in 1975, 1977 and 1978, is at present negotiating for the construction of a sulphurous gas plant. Among its seven competitors are two French firms: Heurtey and the Creusot-Loire group. Moreover, the latter is the second from the top (one billion a year in contracts with the URSS which is its biggest foreign customer). It has notably participated to the tune of 300 million, along with TECHNIP, in the supplying of compressors and aerorefrigerants for the Western Siberian "gas lift" contract.

Elsewhere, many contracts have been signed by its affiliate, Creusot-Loire Enterprises, in the domains of petrochemistry, chemistry and metallurgy.

PUK High on the List Too

And lastly, the third laurel wreath goes to PUK [Pechiney-Ugine-Kuhlmann Company] which already has the construction of an anodes plant and an aluminum plant, to be completed in 1981 on the Black Sea (a year), to its credit and which in addition has begun negotiations for an aluminum plant with a capacity of 400,000 tons that is to be erected in Siberia.

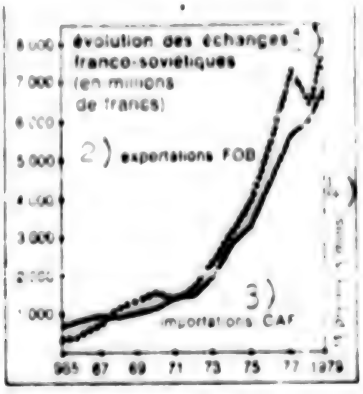

Key:

1. Evolution of Franco-Soviet trade (in millions of francs).
2. F.o.b. exports.
3. C.i.f. imports.
4. First 11 months.

The 14 Biggest Franco-Soviet Contracts for 1975-1979

Company	Nature of Contract and Date of Signing	Amount in Millions of Francs
TECHNIP	Two spice complexes at Ufa and Omsk (1976)	2,184
PUK	Aluminum plant at Nikolayev (1976)	1,500
TECHNIP	Orenburg gas desulphuration plant (1975)	1,064
ENTREPOSE	Togliatti-Odessa ammonia pipeline (1975)	[illegible]
TECHNIP	"Gas lift" system for Western Siberian oilfields (1978)	350
Creusot-Loire Enterprises	"Cefurs" tubes plant (1979)	800
SEFRI	Hotel Cosmos (1979)	713
LMT-Thomson	Telephone switchboard factory (1979)	700
Creusot-Loire Enterprises	Equipment for Orenburg gasfields (1975)	528
Speichim	Three NPK fertilizer plants (1976)	460

VALLOUREC	200,000 tons of welded tubes (1979)	433
SODETEG		
BSN-Gervais-Danone		
Saint Gobain-Pont-a-Mousson	Babyfood factory (1977)	430
Speichim	Phosalone production (1978)	431
COPPEE-RUST	Four phosphoric acid plants (1976)	428

Source: DREE [expansion unkown], L'USINE NOUVELLE.

11,466
CSO: 3100

BONNET SAYS CORSICAN TERRORISM 'DIRECTED FROM ABROAD'

Paris LE MONDE in French 1 Feb 80 p 12

[Article: "The Agitation in Corsica Is Directed From Abroad, Says Christian Bonnet"]

[Text] Three topics, the young and drug abuse, the crime rate in France, and the Corsican situation, were the focus of the discussion held on 30 January for the program "Face the Public" show on France-Inter between Mr. Christian Bonnet, Minister of the Interior, and five journalists.

Asked about the presence of drugs in the schools, Mr Bonnet reminded the audience that he was not the only minister with the responsibility to fight against drug abuse; his colleagues at the ministries of Education and Women's Condition and the Family are equally involved. He expressed "indignation" at the attitude of some teachers: "I do not hesitate to say that I am shocked by the fact that some teachers--do they still deserve this title?--do encourage the use of so-called 'soft' drugs. In actuality there are no soft or hard drugs. From soft drugs one inevitably goes to the hard ones."

Asked as to the means he expected to use to fight effectively against the drugs, the minister recalled that 200 police officers have been exclusively assigned to the fight against drugs and that 600 more have been trained to fight the drug traffic, and that continued collaboration with the police of neighboring and far distant countries was yielding results as to the dismantling of drug labs and networks.

The Klaus Croissant Case

After the topic was raised quickly about terrorism in relation to the recent attempt against the Syrian Embassy and after the minister had stressed the complexity of investigations relative to this type of actions which are characterized by "the tie-in of links between one nation and another, between one fraction and another of this or that international

movement," Mr Bonnet answered a question regarding the case of Mr Klaus Croissant who is now under an order of explusion issued by the Ministry of Interior and who is asking for the permission to stay in France: "I have no intention of modifying the position which I have taken in my capacity as Minister of the Interior in his case."

After having evoked "the present climate of insecurity very largely entertained by the mass media," Mr Bonnet responded to a question relating to the "proliferation" of private security joints mentioned by several journalists present, who even talked about "parallel police systems." "There is no proliferation, contrary to a well-established legend," he declared, "we are systematically opposed to all parallel police formulas--parallel in the very large acceptation of the term and not in a political sense."

On the Corsican question he had said in particular: "Corsica is an integral part of French territory. The population of Corsica is very proud; it realizes full well all that it has given to France but it also knows very well what continental France has given it back in return. A tiny minority which has never succeeded in obtaining but decisive results in the course of electoral consultations--and the law of democracy is precisely the law of the ballot--has undertaken to manifest itself noisily in the last few years. These noisy manifestations are not without a price; and they are no doubt also not quite free of outside direction."

Bombarded with questions as to the origin of these "outside directions," the Minister refused to give any precision whatsoever. He only contented himself by saying that "should international conditions allow it" he would eventually come up with more precision later.

Mr. Edmond Simeoni, responsible person of the autonomist movement Corsican People's Union (UPC), has qualified the statements by the Minister of Interior on the Corsican autonomists as "sad intelligence failure" and as "inept comments." He declared: "The autonomists are directed from abroad, according to Mr. Christian Bonnet. As a matter of fact, colonialism can perpetuate itself only by lying and in this case, he is no exception to the rule."

The autonomist responsible cadre suggests that "the revendication of internal autonomy is constitutional and that the UPC fights within the law, except when there is question of flushing out the parallel police of the Ministry of the Interior."

1731
CSO: 3100

PROSPECTS ON FUTURE ND PARTY LEADERSHIP ANALYZED

Athens ANDI in Greek 15 Feb 80 pp 14,15

[Article by Gerardos Deviliadis: "The Companies Are Being Drawn Up Before the Confrontation"]

[Text] The civil war between the New Democracy [ND] successors has taken on the dimensions of complete annihilation in the last few days. Also, while until 14 February G. Rallis seemed rather intimidated and ready to give up the struggle, suddenly he "recovered," drew up new forces and seems to be most vigorous. Many explanations have been given.

It is said that Karamanlis himself directly encouraged Rallis in a private talk, saying that he at least is not about to support any of the scions and, after all, let the parliamentary group decide on the presumptive leader. Moreover, he dispelled Rallis' fears "concerning a promise" to Averof, but without a direct declaration.

It is true that it had been rumored lately by Averof's retinue that Karamanlis--honoring his indebtedness to Averof for his proposal at the famous council with Kanellopoulos and Mavros, but also junta leaders--would be favorably disposed to Averof's election to party leader. This favor would be a tacit confirmation in the backstages of vote hunting where the promised support would be allowed to be faintly drawn. So Averof was presented as the sole favorite in the impending confrontation while Rallis had been pretty much left out.

But after the conversations in the apartment on Irodou Attikou street, Rallis not only forcefully appeared to participate in the election procedures, but he personally is organizing meetings with supposedly hesitant deputies.

On another front, Misailidis has thrown all the weight of a certain party organization in support of Rallis' side. It appears that Akhilleas Karamanlis is also participating in this struggle. It is no secret that Akhilleas does not like Averof who does not consider the creation of a

Karamanlis dynasty in Macedonian territory indispensable. But also, Akhilleas is not at all sure that his brother's absence from political affairs will not mean his own sinking.

Moreover, Giorgos Rallis has obtained--after some hesitations--the support of KATHIMERINI; it is now a well-known secret that Vlakhou expects much from Rallis' ascension to the premiership. She believes that it is possible for a way to be found for her newspaper--which owes more than 50 million drachmas to the bank and has mortgaged its property on Sokratous Street--to be saved.

At this moment Takis Lambrias is also on the forestage; he is clearly well disposed towards Rallis and has stated that MESIMVRINI, at the moment it should, will reinforce the positions of Rallis leading a renewed right with center-right declinations.

There are, in addition, deputies who lately have been clearly speaking about the need to project Rallis. The list includes names like Dimopoulos from Piraeus, Galenianos from Irakleion, Anastasopoulos from Messinia, Bekiris from Akhaia, Bokovos from Salonica first district, Tourikis from Voiotia, Sodis from Khios, Khloros from Fthiotis, Fotopoulos from Aitoloakarnania, Protopapadakis from Kyklades, Pavlidis from Dodekanisos, Papaioannou from Aitoloakarnania, Papakonstandinou from Athens second district and Papaevstratiou from Lesvos.

They all think that Rallis is the only hope for the party to be saved from the breaking storm of PASOK [Panhellenic Socialist Movement]; it is Rallis' political positions, they say, which are able to attract part of the youth. Moreover, they maintain that a politician who is more than 70 years old and therefore has decreased endurance cannot be considered a successor to Karamanlis. The bridge builder and man who is ready to hand over Greece to NATO and America without terms cannot be considered a successor to Karamanlis.

The other side, the Averof side, seems not simply sure about the succession, it acts as if in power; various stories have already been heard.

A few days ago, a well known industrialist went to the Ministry of National Defense to visit Averof and received friendly advice from the ministerial retinue which would help him in managing his problem: that is, he was informed that it would be good to address Averof as "Mr. President"!

But it appears that even the smallest have "mounted the reed," according to what is commonly said. It is reported, for example, that the general secretary in the Ministry of Agriculture--a close associate of Averof over the last 20 years--in his disagreement with Minister of Agriculture Boutos, informed him with a senior officer of the ministry hierarchy (as is customary) that he would not be the minister of agriculture for very long and if he thinks that he knows everything about agricultural problems

he had better take an interest in...dairy products, obviously meaning the minister's unsuccessful management in his family's enterprise EVGA [expansion unknown]. The same man created problems in the Merchant Marine Ministry by supporting the interests of a former ND deputy in Ioannina who is a known public works contractor and a chosen member of Averof's close circle of friends.

In addition, young deputies like Khatzigakis, Samaras and Tzitzikostas are creating problems with their colleagues inside and outside of the Chamber of Deputies; they consider themselves future ministers at least and in their discussions they range from aggressive to offensive. At any rate, various persons passed over by the premier's office repeatedly have submissively reported the situation and it seems that Karamanlis not only was violently displeased, he also told Molyviatis--who presents himself as a close friend of Evangelos Averof together with the president of the republic--"to tell Vangelis to rein them in."

The votes have not been counted but Averof is optimistic; he estimates his force as double that of Rallis. At the same time, he repeats his "trump": Averof has two things in the battle array. First, there is the "illustriousness" which he has both domestically--which is less--and also abroad--much more--not only as a "man of letters" but also as an experienced politician; second is his steady faithfulness to Greece's western allies and its rightist positions.

When Averof talks about illustriousness abroad, he means--naturally, without shouting it--eastern Europe. He has very good relations with the eastern countries' diplomatic representatives and he thinks his name is very well known there and regarded highly. And, of course, as a man of letters..."Return to Mykinai" was very successful in Romania...

But Averof is also not ungrateful. He has a way of implementing his gratefulness. We bought 200 buses for our army from the Romanian People's Republic. Who would expect such an opening? Even more, when these buses are not so convenient or suitable or good and remain ultimately immobilized. Indeed, they went to Mykinai and did not return from there, a nontheatrical military figure observed jeeringly...

The other dauphin, modern, informed and having captured the messages of the times, has oriented himself towards western Europe. It seems that Rallis is more likable than Averof there. Having linked his name with the EEC, he managed to present a picture which is dear to the European and French-fed President Karamanlis...

But since here are the Balkans and all these do not penetrate much, Averof is used to maintaining that only the conservative part can be the nucleus of a political group which wishes to bring an "ideological" struggle to a close, especially in the future contest with PASOK. He maintains that a party must be formed from within as cadres become more politically homogeneous and that only a firm "ideological line" can lead the New Democracy party to long-lasting power.

Anticipating and looking precisely at this long-lasting power, he says that there is time not only for his smooth and natural succession by Rallis--they are eight years apart--but also...for preparation of the new generation of successors like Varvitsiotis--first in line--Stefanopoulos, Boutos and the others.

So, craftily, he simplifies the problems and from a matter of political choice--far-right or neo-right--he transfers the difference to the level of a personal confrontation and leadership ambition. Naturally, in this case "seniority" must not be ignored--as it occurs even in a military company...

It appears that a sufficient number have joined Averof's company at the moment. Those most devoted to Averof are Stathopoulos from Lakonia, Khrimatopoulos from Piraeus second district, Tzitzikostas from Salonica first district, Samaras from Messinia, Khatzidakis from Trikala, Deligiannis from Pella, Grammatidis from Larisa, Gallis from Fthiotis, Pimbli-Tsirimokou from Fthiotis, Tsiouplakis from Khalkidiki, Tsaldaris from Athens second district, Tragakis from Piraeus second district, Triandafyllou from Fthiotis, Taliadouros from Karditsa, Spyrou from Samos, Koutras from Salonica second district, Kondovrakis from Argolis, Kondaxis from Arta, Konitsas from Voiotia, Klis from Evros, Kefalogiannis from Rethymnon, Karapiperis from Evrytania, Kalandzakos from Messinia, Iakovidis from Imathia, Zaimis from Akhaia, Evstratiadis from Larisa and Dalakouras from Athens second district. In addition, there are Angelos Pnevmatikos and Gondikas who left the party.

However, there are others who have not declared openly, but it is absolutely certain that the greatest part of the deputies--and those from the "army movement" with the army heading--will support Averof because they believe that only he can safeguard the party's cohesiveness and lead in the electoral struggle against PASOK.

All these things certainly occured before 9 February because then Mitsotakis officially stated in Khania to his friends serving him dinner that he is ready to claim the leadership in the party. It would be clearly ridiculous for us to say that his statement disturbed any of the successors. All know very well that Mitsotakis not only has no base in the party--even the "expansionists" do not support him--but his presence has repeatedly stirred up intense protests. Let him cajole particularly those deputies who visit him and try to satisfy their demands to a greater degree.

Mitsotakis' claim, commented one of the party rulers--who is close to one of the dauphins--is considered not simply inopportune but also extravagant. We simply shelter him and do not incorporate him. We have never considered him more than a caprice of the leader.

The leader's "caprice" decided to become a headache. Perhaps, however, this statement of Mitsotakis--who, at any rate, has no hope of finding

fellow visionaries--functions within ND territory in a curious manner. That is, it concentrates all the forces under a banner, the object being for the foreign body to be defeated and rejected.

At any rate, the situation is absolutely obscure. The political ebb and tide at this moment finds its expression within the heart of a party whose leader seems undecided and perplexed. His dilemma--to proceed or not to the presidency in connection with he or his successor undergoing an electoral sinking but also with the fear of the party's decline and dismemberment--has created a network of instability, phobia and uncertainty which is reflected not only in the New Democracy party and its vehicles but also in the whole government mechanism. This dilemma reveals more than anything else the weakness of the governmental party and its impasses.

9247
CSO: 4908

SWEDEN PROPOSES TO MODERNIZE NATION'S RAILROAD SYSTEMS

Athens O OIKONOMIKOS TAKHYDROMOS in Greek 17 Jan 80 p 38

[Text] With the establishment in Greece of an affiliated company named Ericsson Greece, Inc., the Swedish telecommunications material firm, L.M. Ericsson, besides importing a significant amount of exchange, plans also, we have learned, to realize important investments domestically in Greece.

Further, the new Swedish enterprise in Greece is participating, along with other Swedish enterprises, in an investment proposal, which was made in the Railways Organization of Greece [OSE], to modernize Greek railways which--it is true--belong to a time preceeding the twentieth century.

In the first phase, the Swedish proposal, which was recently revealed by thw Swedish minister of commerce, Steffan Linder, covers the rebuilding and modernization of the Piraeus-Athens, Salonica-Eidomeni railway line.

Electrification of the Line

According to the Swedish proposal, it will take eight years to construct the system; after completion, OSE will be able to run on the aforementioned electric train lines at speeds up to 200 kilometers an hour.

These speeds, in combination with reduction in track lengths (because of rebuilding at several sections) will reduce running time to approximately half of what it is now. Moreover, the line's capactiy to carry both passengers and freight will be increased four to five times.

The Swedish proposal is based on advanced technology and experience of Swedish industries in constructing durable rolling stock for railway use which was developed in conjunction with the Swedish state railways. It should be noted that the electrification of railways in Sweden began in 1915 because of a lack of mineral energy sources (coal and petroleum.)

In addition to construction of the system, the proposal includes training of OSE personnel at all levels for the optimum utilization of the equipment which will be handed over.

It also provides financing for carrying out the work which is based on the official program for financing Swedish exports and OECD general terms. The Swedish Council for Financing Exports manages this program.

In order to demonstrate the scholasticism of the Swedish research, it must be noted that the economic-technical study which was done, which is a model of efficiency, includes statistics concerning even Olympic Airline's delays in a year on the Athens-Salonica route.

Rail Car Building Industry

In the frameworks of the investment effort proposed by the Swedes,there has also been a study of the very serious possibility of creating a rail car building industry in Greece, as has happened in Yugoslavia. "That country at present," Lars Nelson, marketing director of L.M. Ericsson, told us, "produces far more trains than we do, which forces us to import products based on our own technology."

"We must acknowledge," Carl Johansson, an official of the Swedish company, told us, "that in the sector of trains, we are working closely with the well-known General Motors who uses our own technology."

"How can a Swedish company tame the electronic revolution?" asks the reliable British newspaper FINANCIAL TIMES. It answers, the evolutionary events are being analyzed which surely have as principal characteristics seriousness, willingness for success and scrupulousness and as a basic goal "primacy of the product."

Nevertheless, it must be stressed that one of the basic factors which established L.M. Ericsson in the electronics club was a Saudi Arabian order which they have begun to execute in an exemplary manner.

Following this event, the directors of the Swedish enterprise believe that their volume of business will have nearly doubled by the end of 1980.

Establishment in Greece

If, in the end, the Swedish affiliate in Greece can carry out its proposals, its investments will rise to one billion dollars and there will be possibilities for payment of this sum with Greek exports.

On a more general side, L.M. Ericsson, via the newly-established Greek affiliated company, will try to share in the future development of Greek telecommunications. A bid has already been presented to OTE [Green Telecommunications Organization] for the new Athens international telecommunications center. It is also expected that L.M. Ericsson will pursue participation in an electronic telecommunications material industry which is expected to be created with the agent ELVYL [expansion unknown]. According to our information, ELVYL must be created within four months at the latest.

Aside from L.M. Ericsson, the other Swedish companies participating in the proposal are: Swedish State Railways, ABV, ASEA and Swedec International who, as provided by the proposal, are expected to cooperate closely both with OSE and Greek contracting companies and Greek industry so that Greek capabilities can be used to the greatest possible degree throughout execution of the work.

The Swedes and Trains

"A return to trains": this was the slogan months ago in this far northern country. The government did not need to repeat it twice. A few weeks after the campaign began, the stations were bulging and railway workers were forced to work overtime.

But the "revolution" of trains was not accidental. It was the result of a coordinated effort for information and, especially, a decrease in the price of tickets by 58 percent. "We had calculated that the ratio accruing from the decrease in tickets and dropping gasoline consumption would be more than our balance of payments," says the Swedish minister of commerce.

"The results were more than spectacular," says Johansson. Where our government anticipated a 10 percent increase in passengers, a multitude equivalent to a 25 percent increase was seen! "It is a success without precedent, since we decreased ticket prices by 58 percent, but we calculate that the railway's income will increase eight percent and we are earning currency because of the reduction in purchasing fuel," Steffan Linder told us. All these things happened in a country which, according to a colleague, "alienates" 20,000 of our fellow countrymen who do not seem to want, however, to escape such a form of "alienation."

9247
CSO: 4908

INDEPENDENCE PARTY LEADER COMMENTS ON NEW GOVERNMENT'S CHANCES

Reykjavik MORGUNBLADID in Icelandic 10 Feb 80 p 17

[Article by Birgir Isl. Gunnarsson: "The Government"]

[Text] A new government has been formed. The voters have a right to know the positions of Althing delegates with respect to the government, both of government supporters and government opponents. While this new government holds power I shall be among the government opponents, in accordance with the decision of the Althing delegation of the Independence Party. This is not to say that I will not support anything good done by the government. Rather this means that, in essentials, I will struggle against this government.

To the degree that it is possible to explain it in a short article I will endeavor here to give reasons. In essentials the reasons are threefold: the background of the government, its policy statement and its composition. I will discuss each of these three items briefly.

Background

The main characteristics of this government are unhealthy. All human intercourse, whatever, must be based on a healthy situation. This is true whether intercourse in families, in companies, in political parties, or in the highest national institutions, such as the Althing, is in question. Opinions differ everywhere concerning people and things. For this reason it is only possible to resolve conflict, happily, if people can talk together sincerely, state their views, and endeavor to come to a compromise.

Constant Feelers

There are now 21 Althing delegates in the Independence Party Althing delegation. We found out last week, as we were organizing an Althing delegation that expresses our political opposition, that one of our number had been putting forth constant feelers and offers in December, to the effect that he was ready for any kind of cooperation, aimed in any direction, concerning government formation.

All this went on in the greatest secrecy and this makes it clear that, in the case of certain fellow party members, comrades in the struggle, and friends, we were relying on them in vain. All 21 of us sat together for meeting after meeting, day after day, to discuss prospects and conditions. No one suspected that one of the group was going behind our backs at the same time.

First News Of Our Opponents

It was when the leaders of other parties informed us that government formation attempts were well advanced that we first realized the real truth of the matter. Everything that had gone on before was a kind of propaganda campaign waged by all sides. One thing we know for sure about the situation, there was never any desire on the part of the Progressives or the People's Alliance to enter into a coalition with the Independence Party. The main effort of attempting to split the Independence Party was really what it was all about.

Although there is sufficient reason for opposition to the government in this background, which has found its expression in small ways in other areas, there is much more. I will discuss that in the next section, which is concerned with the policy statement.

The Policy Statement

Unfortunately the policy statement bears the mark that it is an agreement of leftists. In many weighty essentials it goes against the basic policies of the Independence Party. A loose grasp is taken of the inflation problem; the direction is towards increased state expenditures and nothing is said about how the income will be found to meet them or where expenditures may be decreased.

The government is thus moving in the direction of increased taxes or of a treasury deficit, increased issue of banknotes and the making of large foreign loans. In pricing matters the policy is to fix price increases without regard to domestic costs and that is wont to constrict much business profit and bear, in its train, recession and unemployment.

No Mention of Defense Matters

The chapter on foreign affairs in the policy statement also gives rise to concern. Not one word is devoted there to foreign affairs and defense. On the other hand, there is discussion in the chapter concerning major development of employment in the Sudurnes area and that the Security Committee should speed up its work. That raises questions concerning what the real policy in national security and national defense is. With the People's Alliance on board there is more need than otherwise to mould the policy into permanent form.

Opponents Receive Major Ministries

These are only a few of the items worthy of discussion in the policy statement. A third area which must determine opposition to this government is its composition. Those Independence Party men who have joined forces with the major opponents of the Independence Party in politics have only received three ministries, that is, the prime ministership, and the ministries of agriculture and of justice. Everything else is in the hands of our opponents. It is thus clear that with this government a leftist spirit will hover over the waters. That calls for the determined opposition of Independence Party people.

11433
CSO: 3111

INDEPENDENCE PARTY LEADER JONSSON: WE CAN AVOID SPLIT

Reykjavik MORGUNBLADID in Icelandic 8 Feb 80 p 17

[Article by A.J.: "Palmi Jonsson On The Government Formation: 'It Need Not Lead To A Split In The Independence Party'"]

[Text] "The position taken by Fridjon and the rest of us in support of the government formation of Gunnar Thoroddsen is without regard to any positions taken by the Althing delegation of the Independence Party in the matter," said Althing delegate Palmi Jonsson in a conversation with MORGUNBLADID yesterday evening, at the close of an Althing delegation meeting of Independence Party members. "I shall continue to meet with the Althing delegation, at least until it is decided otherwise. It is clear that I am an Independence Party member and will continue to be. There have frequently been splits of people within the ranks of the Independence Party but I think, even if paths diverge concerning positions towards government formations and a major step is taken, that that need not lead to a split in the Independence Party. I am convinced that effort is being made to bridge the gap which may form, even if after the fact."

"Will you wait on decisions concerning the distribution of ministries until the position of the party delegation is clear?"

"There will be discussion of the distribution of ministries today and it is hoped to have the matter taken care of by tomorrow. I think that the position of the Party delegation will be clear by tomorrow."

"Is it being done before or after the Althing delegation meeting of the Independence Party members?"

"I would not want to connect the two. Gunnar Thoroddsen wants to have the government formation completed by Friday."

"Will you become a minister?"

"It has not been decided yet who will become a minister."

"Are there those among the Independence Party people in your district supporting your decision?"

"I have received no support there and have not asked for such support."

"If you are a supporter of the government and the party Althing delegation is in opposition would you think it proper for you to attend Althing delegation meetings of the Independence Party?"

"That could provide a certain difficulty but that will be discussed further in the party."

"What impresses you the most in the policy statement?"

"It is, to be sure, an agreement of three sides, and I think that the policy statement is not everything but only the agreement and will of the three sides in the government.

The policy statement could be more specific but there are important things there concerned with various restraint measures in economics. But I came in on this only during the last stages, the last part of last Tuesday. I made certain suggestions and many were accepted."

"What do you think about the proposal made in the Althing delegation meeting today that the Althing delegation create a committee to go over the policy statement with its authors?"

"I think that this proposal is too late."

"What influence do you think that this development will have on the Independence Party?"

"It is difficult to see the future and it is still unclear what the reactions of the party will be, but if the Athing delegation joins forces with the government I think that it will have made a lucky choice. If not, then paths have diverged in this area. I think that we who support this government intend to broaden the party and bring it close to people who would otherwise not be drawn to it. I think that the Independence Party stands at a crossroad. The policy of the part at the last elections was unhappy and it is clear that the policy of this government is serious. I also hope that, if paths diverge concerning support of this government, effort is made to bridge the gap swiftly."

"What do you think about your reelection? Should there be an election in a year or in four years?"

"I cannot decide that myself, it is the people at home in my election district that will decide whether I remain in office or not. I am an Independence Party man, although, at this stage, I might say that I am an independent Independence Party man."

"Do you think that this government is a strong government?"

"The government has, to be sure, no great majority, but its strength must revolve about the solidarity of those in it. It is clear that there is the greatest need now for there to be a government in Iceland. And I think that if this government formation had not been successful that there would have been recourse to an extra parliamentary government and thereby the Althing would have failed in its obligations."

"People have said that this government formation has taken place in much haste and it was as if a government were being formed in Iceland once and for all. Did you think that there was abnormal haste?"

"I shall say nothing about it. It seems to be that the persons concerned endeavored to solve a problem and achieve agreement and in that respect there was a proper spirit in the discussions which was doubtless noticed, to some extent, by all taking part in them. And there could be no delay in forming a government or there would have been an extra parliamentary government."

"Do you think that the good will of the Progressive Party and the People's Alliance in speeding up government formation discussions was based upon the possibilities that they saw to bring about a split in the Independence Party?"

"I have nothing to say about that; nothing of the sort happened. I have no desire to make insinuations in regard to those parties with whom I must cooperate."

11433
CSO: 3111

PAPER ATTACKS NEW GOVERNMENT FOR LACK OF SECURITY POLICY

Reykjavik MORGUNBLADID in Icelandic 10 Feb 80 p 16

[Editorial: "What Is the Policy In National Security?"]

[Text] The policy goals of the government of Gunnar Thoroddsen in foreign affairs are noteworthy, both in terms of what is said in its policy statement and also, on the other hand, for what it leaves unsaid. The government intends to follow an independent foreign policy, as it is called, and it is thus stated: "In this connection, participation in the United Nations Organization and the Nordic Council will be especially strengthened." Noteworthy is that nothing is said here of NATO. When the leftist government of Olafur Johannesson was formed, on 1 September 1978, it was remarked, in its policy statement, that an unaltered foreign policy would be followed. At that time People's Alliance partisans saw cause to emphasize that they were opponents of the membership of Iceland in NATO and of the presence of defense forces in Iceland. Now they see no reason to mention any such considerations in the policy statement. Should that be understood to mean that they have given up their opposition? Or is it the case that they see no reason to reiterate their opposition since the NATO alliance is nowhere mentioned in the government concordat and is thereby set lower than other international agreements for the first time since 1949.

There is no doubt that this conspicuous silence on the NATO alliance will henceforth be noted widely in Iceland, both among those who are friends to us, and those who, for reasons of special interest, desire that the connection of Iceland with NATO be broken. The silence demands that the prime minister and the minister of foreign affairs make absolutely clear, forthwith, the position of the government on the Atlantic alliance and the defense cooperation agreement with the United States.

There are now major uncertainties on the international scene and there is no cause for Iceland increasing them with half heartedness in its national policy.

It is likely to draw people's attention, at least people abroad, that in the section of the policy statement of the government, dealing with foreign

affairs, there is a sentence such as: "A major effort will be put in action towards building up employment in the Sudurnes area." This sentence, in this place, can be explained by reference to the emphasis which the communists have placed on the fact that: "A precondition to make possible the creation of a wide acceptance of the departure of the American military forces is that employment be strengthened in the Sudurnes area to the degree that those now working for the military can find jobs in Icelandic occupations," as Svavar Gestsson expressed this policy of the communists in a conversation with THJODVILJANN yesterday. And he added: "In the section on foreign policy this is recognised especially with the placing of special emphasis on building up employment in the Sudurnes area."

It is clear from this statement of Svavar Gestsson that the communists think themselves to have obtained a preliminary victory in their struggle against the presence of defense forces in their agreement with Gunnar Thoroddsen; they are not thinking, first and foremost, of the interests of the people of the Sudurnes area, although this building up of employment is needed. No circumvention can help hide this fact. The experience of the communists with the clauses of the policy statement of the first prime ministership of Olafur Johannesson, 1971-1974, wherein a stride was paid, in plain words, to the departure of American military forces in stages, have taught them that it is better to have the wording of this matter obscure.

Olafur G. Einarsson, the chairman of the Althing delegation of the Independence Party, spoke about this yesterday in MORGUNBLADID in the following terms: "It may be that this is what Ragnar Arnald was speaking of in the intergovernment meeting of the People's Alliance when he said that Gunnar Thoroddsen was isolated and for this reason People's Alliance partisans had an easy time with insisting that there was no need to have such a clause in the policy statement. That could be achieved later."

Both abroad and at home people are in doubt about how the clauses of the policy statement of the new government on foreign affairs are to be interpreted. The suspicion of people that something fishy is going on has arisen, not the least because the communists are proud of their successes, although they say nothing at all about the fact that they have certainly wanted more. But they are working to that end in quiet. Only clear statements of the prime minister and minister of foreign affairs on the security of Iceland can act against this suspicion.

It could probably only happen in Iceland under conditions of abnormal indulgence of the communists that a government formation could take place at a time of great change in international affairs without a word being said on the policy of the new government to safeguard the security of land and people. A major characteristic of governments, which the Independence party has participated in, has been exactly their policy firmness in this critical area. The lack of policy of the new government under Gunnar Thoroddsen in national security matters is best explained by the calamitous influences under which it was formed.

11433
CSO: 3111

SAUDI ARABIA OFFERS TO SELL OIL TO ICELAND

Reykjavik MORGUNBLADID in Icelandic 6 Feb 80 p 3

[Unattributed article: "A Request Has Been Made For Discussions With Saudi Arabia On A Crude Oil Purchase; Icelandic Negotiating Committee Will Probably Travel Soon to Riyad"]

[Text] "There has been a request for discussions with Saudi Arabia on a possible crude oil purchase and it will be decided next week when discussions will begin. It is clear that the Icelandic Negotiating Committee will travel to Saudi Arabia since all oil exports are in the hands of the state company, located in the capital of Riyad, and negotiations will have to take place there," said Johannes Nordal, manager of the State Bank and chairman of the Oil Trade Committee, when MORGUNBLADID questioned him yesterday on the proposal of Saudi Arabia to sell Iceland 700,000 tons of crude oil each year.

"We cannot determine, at this time, how economical it will be to purchase crude oil from Saudi Arabia; we will have to wait and see," said Nordal. "The one thing that may be said is that Saudi Arabia has had the lowest crude oil prices of all OPEC countries and the Saudi Arabian government has endeavored to hold down price increases and that, in this respect, there is a good likelihood that the purchase will be economical. But whether or not this turns out to be the case depends upon what kind of agreement may be obtained on delivery and sale, and whether or not this fits in with our import requirements in general.

The offer has been made because the Negotiating Committee made a request to the Icelandic embassy in Washington that it would put us in contact with oil producing countries of the western Atlantic. Since Saudi Arabia has a large embassy in Washington, and we have no governmental connections with it, it was decided that the Icelandic embassy would also take up the matter with the Saudi Arabian embassy in Washington.

Out of this there came word from the Saudi Arabians that they were ready to begin the sale of crude oil to Iceland. This is not a formal offer, but a positive reply about entering into an agreement and that there are good prospects for such an agreement.

The figure under discussion, 700,000 tons, has been arrived at, I think, because the Icelandic embassy has let the Saudi Arabians know what our oil needs are. That is approximately our oil needs today if the crude oil is converted into the varieties we need. There has been no conclusion drawn by the Oil Trade Committee in this that it is economical to purchase any quantity of this magnitude.

It is well known that, in the past, Saudi Arabia has adhered to the policy of making direct agreements with governments, especially small countries, for the sale of crude oil and all of Scandinavia has taken part in such discussions. Denmark, for example, entered into such agreements in the past, as has been in the news."

11433
CSO: 3111

FOREIGN BORROWING INCREASES 24 BILLION KRONA IN 1 YEAR

Reykjavik MORGUNBLADID in Icelandic 8 Feb 80 p 2

[Unattributed article: "Increase Of Long Term Foreign Debt Last Year Was Around 24 Billion Krona"]

[Text] In all, income from foreign long term loans was 52 billion krona and repayments 28 billion krona so that the net increase of long term foreign debt was around 24 billion krona, at the average exchange rate for the year, as compared to 24.6 billion krona in 1978, calculated on the same basis, according to a provisional summary of the Icelandic Central Bank on the development of the payments balance and money matters in 1979. It is estimated that the balance of other money supply movements, especially short term movements, was favorable by almost 4 billion krona, and the money supply balance on the whole favorable by almost 20 billion krona. With the subtraction of the nearly 3 billion krona deficit in the trade balance that amounts to a 17 billion krona favorable balance in the money exchange of the bank.

The reduction of the foreign payments balance in 1979 suggests that the trade balance will be favorable by 9.4 billion krona against 10.7 billion krona the year before. It is expected that the administrative balance will be favorable by 12 billion krona, against 1 billion krona the year before, since the domestic balance of trade is unfavorable by 2.6 billion krona, against a 9.7 billion krona favorable balance before.

11433
CSO: 3111

PCI'S CHIAROMONTE CRITICIZES LABOR UNION MOVEMENT

Rome RINASCITA in Italian 22 Feb 80 pp 9-11

[Article by Gerardo Chiaromonte: "The Job of the Labor Unions"; passages enclosed in slantlines are in italics]

[Text] 1. There has been no lack of evidence lately, by way of significant actions, to prove the combativeness of the working masses and their commitment to the guidance provided them by their unions in their struggle; the most recent of these indications was the impressive carrying out of the general strike of 15 January. At the same time, however, there are growing indications that the labor union movement itself is in trouble.

Its problems are of varied natures. Uppermost are those of a general political nature, linked to what occurred between 1976 and 1979 (to the difficulties that opposed and eventually shattered the attempt, distorted and partial though it was, to field a policy of democratic unity), and to what is occurring now on the national political scene in the absence of a government worthy of the name. The workings of unity and autonomy in the labor union movement are, in fact, always conditioned by general political events and by the advancement of an overall democratic process. In my opinion, the effects produced within the labor union movement by the polemic that developed after 20 June 1976 against the PCI [Italian Communist Party] (and that was at times exacerbated by our own errors as well) made and are to some extent still making themselves felt: certain polemics within the labor union movement in past years have been fomented on grounds not concerned primarily with labor movement issues (and we find interesting today the second thoughts of some of the authors of those polemics).

The labor union movement's principal difficulties stem, in effect, from the failure of the "EUR [Universal Exposition of Rome] approach" to investment, employment and new Southern Italy policy. A rigorous approach--such as, precisely, the one put forward at the EUR, which was indeed carried forward with a deep sense of democratic and national responsibility by the better part of the labor union movement--is bound to run aground and collapse in the absence of democratic planning and of a government capable of carrying out a planned policy. When this happens, the masses misjudge reform issues, lose faith in the possibilities of change and fall back on

sectorial and corporatist positions. There is at the same time an increase in the difficulties experienced by the labor union movement--and by the workers and democratic movement as a whole--in advancing needed action on major economic development issues.

Exacerbation of the social crisis, as we have often stressed, leads to a spreading of particularisms, disintegrative influences and corporativisms of various natures. This complicates the labor union movement's problems in various ways, but principally as regards labor union control of the labor market (while union control of wage and salary scales also becomes increasingly difficult with the spread and growth of automatism, and the tendency toward egalitarianism that has prevailed in labor union policy over the past few years and its consequent leveling effects on remuneration). It also complicates for the confederations (and for the Unitary Federation) the problems of coordinating and managing the craft unions: what has happened and is happening in public employee sector is an example of this, but, in my opinion, so is what is happening in the relations between the CGIL [Italian Confederation of Labor]-CISL [ICFTU]-UIL [Italian Union of Labor] Federation and the FLM [Federation of Metalworkers] (one cannot escape the impression in this case, as in many, that there are /two/ distinct leaderships in the labor union movement). Of course, the movement's widest divergences (linked, let us never forget, to the growing corporatist fragmentation of Italian society in crisis) are in its relations with so-called independent unionism, the spread of which, especially in some sectors, cannot other than cause concern.

And lastly, there is evidence of problems in the relations between the labor union movement and the workers (on the one hand) and between the labor union movement and public opinion (on the other). The first are linked, above all in the factories, to malfunctions in the democratic process, to the effects of bureaucratization, and, more generally, to the way in which the factory councils but also other union structures, operate. The second are linked to the growth of corporatist agitation and strikes, to the forms of struggle that sometimes prevail, and, merely as an example, to the difficulties in implementing the self-management of strikes in the public sector.

In this situation, temptations can only multiply on the part of those who seek to take revenge and inflict a crippling blow on the labor union movement. The fact is that those who believe they can come out of the crisis with some sort of "recoupment," having nullified or redimensioned the gains made by the workers movement over the past several years, know that to achieve this objective they must inflict a damaging blow on the labor union movement, its prestige, and its authority among the masses. And to do this, they obviously aim to exploit the movement's current difficulties. Heaven help those who underestimate this danger. Heaven help those who fail to understand this aim to be that of certain employer groups as well as certain moderate and conservative groups, in addition to being that of the reactionaries.

This aim--in its present stage--is still only a hope. The unitary labor union movement is still a major force in Italian democracy, and it has not been defeated. The difficulties we have brought out must not blur a clear and realistic perception of the power relationships involved. Nevertheless, the dangers are real. We must work for the rapid solution of these difficulties: for the future of Italian democracy itself. This objective involves all truly democratic force, workers and intellectuals. This is why we--as the PCI--deem it our duty to express publicly our opinion on problems of this importance for the entire workers movement, and to open a debate. This is therefore not interference whatever in matters that do not concern us. Our interest in the future of the labor union movement is something we cannot and will not forgo.

2. We are spurred, in this commentary on the current state of the labor union movement, by our profound belief in the fundamental value we place (in our democratic approach to socialism, in our conception of the relationship between democracy and socialism, and in our view of the manner in which a socialistic society must be built in Italy and in Western Europe) upon the process of unity and independence of the labor union movement. The pluralistic view that inspires us encompasses, as is well known, not only the various political and cultural forces but also, and in the first place, the labor union movement. I shall not call up again here the resolutions passed recently at our PCI's 15th congress; however, I believe this reaffirmation of their essence is not altogether pointless, considering also the continual need to combat the tendencies toward closed-mindedness and sectarianism that can emerge--and in fact do emerge here and there--in our own party as well.

But more than that: The starting point of this debate cannot be other than full recognition of the /political/ value also that the advancement of the process of the labor union movement's unity and independence has had over the past 10 years. This advancement has in fact been one of the prime factors in the advancement of democracy and (let us not forget it) in the opening to the left that have taken place in Italy.

The discussion has resurfaced in the last few weeks--as it always does whenever the labor union movement is faced with problems and obstacles--on the "job of the labor unions": on whether, that is, the movement should confine its activity to its "inherent" functions of defending and improving the salaries of employed workers and the organization of their work. Given the Italian labor union movement's historical and cultural traditions and the credentials of its birth (of course, these are valid mainly for the socialist and later the communist labor movements), this discussion might seem even idle. And yet, it is a discussion with rather current and new implications.

The need certainly cannot be overlooked (and I will return to this later) for the labor union movement to devote more of its attention and activity to the problems of the factory: the organization of labor, the safety and

environment of the workplace, productivity, and wages. But, in our opinion, there is an absolute political need (in the interest of national democratic development) for the Italian labor union movement to remain anchored to a global view of the nation's interests--that its view encompass all categories of workers and not just that of employed workers, as well as, in all their aspects, the issues of Southern Italy, women's rights, and youth. This is necessary to check those real tendencies (to which we have referred above) toward corporatist fragmentation, particularism and categorism, and to be able to subsume categorist and corporatist struggles and rivalries into a comprehensive view of the nation's problems. The values that flow from these tendencies--and spread among sizable groups of workers--are prejudicial to the outlook for the democratic and socialist development of Italian society. We cannot close our eyes to the spread of certain unionistic conceptions--based precisely on sanctification of categorial demands or those of limited groups--that find easy adoption not only by independent labor unionism but also by groups and categories within the labor confederations themselves.

It would be a serious blow to the hopes of the democratic and socialist struggle were myopic views of the categorist, wage-based, in sum, corporatist type, to prevail in the Italian labor union movement. This would probably transform the democratic features that characterize our own Italian society and liken it more and more to other capitalistic societies, in which there is certainly no lack of hard and prolonged union struggles, but in which the prospects for democratic change are extremely weak. Perhaps then the so-called Italian anomaly would be abolished: which is of course the dream of the reactionaries of our own as well as other countries.

The "job" of the labor union movement must remain a national, democratic, Southern Italy "job," as in substance it has always been, as Luciano Lama has repeatedly stated it all these years, polemically and in his "EUR approach." This must be made manifest, above all, in the movement's preparedness to pursue a policy of effective economic and social transformation: even in the face of the crisis's new problems (the future of big industry, its "governability," work quality, youth problem, hidden economy, public administration, etc.). However, it is not solely a matter of being prepared to pursue a policy but also, and mainly, that of a capability for action and struggle. Corporatism and particularism can be defeated only through a revival of faith among the masses in the possibilities of transforming and reforming the social structure. And this demands--it is appropriate to recall--a relationship between confederations (and Unitary Federation) and craft unions, in which the preeminent and /predominant/ consideration will always be an overall evaluation of general problems and wage scale demands themselves.

Of course, the seriousness of the problems raised by this conception of the labor union movement's tasks does not escape us, among them being that of relations among the movement itself, Parliament and the parties. These

problems must be addressed and resolved. But there is no turning back. Nor can one have one's cake and eat it too: complain, that is, because the labor union movement concerns itself only with employed workers and disregards the unemployed, the youth, and the Southern Italy issue, and at the same time complain about the problems that must inevitably arise, and that are very complex, when the labor union movement addresses and deals with our governments on issues of general economic policy. True, there is a need for corrections on what has been done so far in this sensitive area of relations with the democratic institutions; but these corrections cannot be allowed to blur the /national and Southern Italy/ orientation that must increasingly characterize the Italian labor union movement. Lastly, it must be remembered that the labor movement in all the other Western industrialized countries is being compelled, more and more, to go beyond its traditional "job" and concern itself with economic policy, deal with our governments, and so forth. This is inescapable, although it does not in itself necessarily generate the added capability required to act and struggle for change.

We therefore fully believe that the labor union movement's involvement in democratic planning issues must be intensified and reinforced. Recently, precisely because of the difficulties we have discussed above--the political as well--its commitment to one Southern Italy policy has frequently ended up confined to its involvement in the negotiation of wage scales and demands, while a different policy is actually being implemented. It also seems to us that its dispute with the government last Fall, which led to the general strike of 15 January, could not really be defined, from its inception, as a dispute over Southern Italy policy, or even as a dispute that went in any way beyond the immediate, though admittedly legitimate, interests of the employed workers.

The test beds today for all concerned are the struggle for implementation of the first part of the contract agreements won in 1979 (the part dealing with right to information on investment policy and on productive performance) and the struggle for investments in Southern Italy. The struggle begun in 1974 in the big industrial complexes (which bore fruits, even though it clearly did not and does not extinguish the struggle for economic planning) must be continued in the most appropriate manner under today's conditions. Regional planning, investments and realinements of state-controlled funds, energy planning--these are only a few areas, by way of examples, in which the labor union movement's involvement can be decisive in helping the nation overcome its crisis, in proceeding toward a new kind of development, and in defeating the recoupment offensive.

However, we do not believe the Italian labor union movement can succeed in these areas unless it is able to become more deeply involved than it has been during the past several years, overcoming also its schematisms and ideologisms of various kinds, in the issues of so-called industrial democracy. We have recently received proposals: one from the general council of the CGIL concerning the "enterprise plan," and the one presented by

Merli Brandini at the recent CISL meeting. They are two different proposals, and it is our considered opinion that on an issue of this importance a serious debate must ensue that cannot be limited solely to the labor movement and that must draw on the experience that has been acquired and the knowledge that has been developed in the other countries of Western Europe.

3. The need is evident, from what has been said so far, for maximum coordination between the labor union movement's general approach and its labor demands policy. At this moment, it faces two major tests: the struggle in the industrial sector and that of the different craft contracts in the public services sector. We do not hesitate to voice our concern and alarm in regard to these two tests; strictly within the context of the foregoing discussion.

Conditions in the factories appear to us ripe for an ambitious general round of wage demands. There is inflation. There is the attitude of impressive groups of employers who are granting wage increases left and right beyond the demands of the unions themselves, and who lead one to suspect, with increasing grounds for belief, that they are intentionally trying to drive inflation up to the point of devaluation of the lira. As communists, we do not hesitate to state that a general (and "egalitarian") wage increase would be contrary to the interests not only of the nation as a whole but also to those of the employed working class itself. It would start a relentless race between wage increases and inflationary upswings (ending in devaluation?): and this would deal a death blow to that concept of labor movement policy we discussed above, and endanger the democratic system itself. But--we repeat--it would not even benefit the employed workers. Controversies would increase among the blue-collar workers and between the blue-collar and white-collar workers.

A wage problem does exist, however, and must be addressed: the conditions created over the past few years by automatism and leveling must be corrected. The "egalitarian" trend is now being widely recognized to have been excessive. The policy that has been pursued in regard to white-collar workers, technicians and middle-management employees has not always been fair; and there is the growing danger of developing animosities among these categories toward the blue-collar workers and the unions. Recovery of effective control over wage scale dynamics by the unions is crucial. This can be accomplished through the introduction of those reforms in the wage structure that have been frequently talked about in labor movement circles in recent years with little real success in this direction. It is necessary now, however, to start working immediately on a new approach based on the realities of struggle today. Thus, wage scales must be tied, enterprise by enterprise, to occupational factors, to work-management reforms, to work quality improvement efforts, to increased productivity (and profits). Perhaps there was a limitation in this regard in the "EUR approach," in that the mainstays of this policy (investments, employment, Southern

Italy) did not appear to be anchored in working conditions, including wages, and to increased production and productivity. A change in this area, therefore, appears necessary to us; we are convinced that--still within the framework of the general approach I have advocated above--the labor union movement and its leadership must revert to devoting major attention to the issues of work management and productivity, enterprise by enterprise, sector by sector.

While we oppose (as we are doing at this moment, properly so, in my opinion) a revision of the sliding wage scale as a means of safeguarding workers' wages--without, however, making of this position a matter of principle (which would be senseless) and without rejecting warranted examination and correction of faulty mechanisms--we cannot, as a union and workers movement, evade discussion of productivity, and of overcoming schematisms and ideologisms. It appears to us that a vast informative and cultural campaign is needed on productivity not as an employers' weapon for increasing his exploitation of labor and profits, but as a weapon of the workers movement in the implementation of its transformation policy. These are urgent tasks, requiring--this seems to us an important though very sensitive point--a political struggle inside the factories, given the existing diversity of positions within the labor union movement itself.

In the public sector also, we are going through a difficult period. There is a disagreement between the confederations and the craft unions. The danger of excessive demands has already begun to materialize. The responsibility for this state of things must be borne by many. We ourselves are not exempt. Nor are maneuvers lacking to unload on the leftist administrations of the large cities the controversies that ensue from the accruing errors, omissions and patronage of the DC [Christian Democratic Party] and its governments. In this regard as well, consistency on the part of all appears to us indispensable. Lining up with the positions of the Unitary Federation (which, as of this writing, is still encountering difficulties and obstacles among the craft unions) seems to us the best approach. We shall do so: also as communists functioning at the head of local administrations. And, starting with the contract negotiations currently in progress, we will work to establish a more effective, more professional and more productive approach to reforming the public administration.

4. The labor union movement's action and struggle to establish a broader control over the labor market must, in our judgement, be consistent with the general policy line. Thus, insofar as concerns reforms to job placement, labor mobility, and the administration of unemployment benefits (very topical issues at this time), it seems to us that the objective cannot be, together with the essential one of defending the workers and their rights, other than that of increasing our economic system's general productivity as a necessary step toward eventual economic and social transformations.

The hidden economy concerns us all. And there seems to be widespread agreement on the need to do everything possible to bring this economy, gradually though it may be, out into the open, without, however, causing such a shakeup as to further exacerbate the situation of the men and women working in it (besides not hurting the national economy in sectors that, like it or not, appear rather vital to it). The road to take seems to us to be that of working tenaciously for specific and partial union agreements that succeed in safeguarding and respecting the rights of larger and larger segments of these men, women and younger workers, and that will thus bring larger and larger segments of this hidden economy out into the open. But to do this--and we return to the issue of the general approach--it will be essential that a /positive/ policy be developed on the part of the labor union movement toward small and medium industry, the handicrafts, the farming sector, and cooperation. We think this policy is currently lacking or sporadic at best. Instead, it should represent a basic ingredient of that national, democratic, Southern Italy-oriented approach I have talked about above.

This part of our discussion touches again upon the issues of women in the work force and of the youth situation, which obviously also present more general aspects. For brevity, we will not address the merits of these problems. We point out, however, that a full-scale polemic is in progress on these issues, directed toward the labor union movement by the various women's movements and feminists and by the youth movements. The outstanding problems, insofar as concerns the female working masses, are those involving implementation of the parity law and, more generally, those concerning employment of women and the status accorded to these problems in overall union policy (even where safeguarding the current level of women's employment is concerned). The problems of the youth situation are different; they range from criticism of the youth employment law, to ways of coping with the problems that ensue from actual application of this law, to relations, of organizational nature as well, between unemployed youths in search of work and the labor union movement. A discussion has been opened recently on these issues by the FGCI [Italian Communist Youth Federation]. The problems are quite sensitive and complex, for the women and the youths. In our judgement, they run into the same mode of existence and way of working of the labor union movement as do problems that are fundamental to the future of the country. One cannot escape the impression, for example, that addressing the issue of the "borderline" students in universities and schools as it was addressed caused serious damage, or at least a setback, to the job and developmental aspirations of a nonnegligible segment of the younger generations.

5. The final points we wish to make have to do with the internal life of the labor union movement. We wish to make it clear from the outset that these points must be discussed and resolved /within the labor union movement/. We are simply expressing our opinion; and we must express it as part of the workers movement, which cannot sidestep its duty to intervene in matters that are crucial for the workers.

Many complaints and accusations are being brought against the methods and activities of company unions. There are indications of bureaucratism (excessive number of local detachments), assemblyism, and growing absenteeism. The main danger seems to be that unity among the union delegates could develop into a form of "company unionist" unity. The situation varies from province to province and from factory to factory. A survey is needed. And changes are needed: not to retrogress from the company union movement concept but rather to advance the great democratic urge that gave rise to it more than 10 years ago. A massive campaign in the factories, therefore, would be desirable--a campaign organized and promoted by the unitary union movement--to verify with the workers all questions regarding the operation of company unions, to gather suggestions for changes, and to work toward eliminating the deficiencies at the bottom of current complaints.

The question of distribution of membership cards is linked to the need to develop union democratic methods. Cards are currently distributed by delegation, and their renewal is automatic. Dues are checked off by the companies and turned over to the unions. The dangers of bureaucratization to which this gives rise (to say nothing of the abnormalities that also take place) are evident. The proposal advanced by Rinaldo Scheda, therefore, appears to be very appropriate, wherein card renewals would be subject to review (every 2 or 3 years), and thus, periodically, a large-scale political and orientation campaign on the subject of membership in the labor organization would be conducted among the workers. No one can fail to see the important democratic value of this suggestion, which we hope will be accepted by the entire labor union movement.

In the resolutions adopted by the PCI's 15th congress a few months ago, we raised the issue of the incompatibility between labor union responsibilities and political office (party or elective), and that of parity among the three labor organizations in the managing bodies of the Unitary Federation. And we repeat: These questions and any possible changes they may entail must be decided by the labor unions themselves; no one else outside of them can do so. Nevertheless, it seems to us desirable that the more intractable aspects of the issues of incompatibility and parity be overcome in the interest, as always, of rendering the internal workings of the labor union movement more democratic and of facilitating improved relations (and exchange of experience and responsibilities) among the union leaders and cadres and among the political leaders and cadres. The unions as well as the workers parties have frequently suffered in recent years from the lack of such a relationship and opportunity for transfer of experience.

6. The decisions taken many years ago on company unions (which were an emanation, in the workplace, from unitary unionism and at the same time represented /all/ the workers), on incompatibility, and on parity were seen as a necessary stage in the process of achieving unity of labor organization, and indeed as a means of accelerating the unitary process. Things (union and political) actually went in such a way that the aim, of organizational unity, was not achieved. Hence, another source of current contradictions and difficulties.

As matters now stand, to overcome these contradictions and difficulties and continue on the way to unity and independence of the labor union movement, the time appears to be right for an analysis and a debate on the manner in which the labor union movement unity and independence process has gone forward in recent years, on the obstacles it has encountered, and on the defects and mistakes that have come to light. This analysis and this debate must develop, in the first place, within the labor union movement and through a broadened dialectic. But they cannot properly fail to concern and involve the entire workers movement and the democratic forces: on all the issues, political and labor union, but essentially on the major questions of the labor union concept in a democratic society like ours, of the specific policy to be followed by the labor movement and the political parties toward renewed development, democracy and peace, and on the struggle against terrorism. On the latter issue, we hold all hypocrisy and reticence to be wrong; and this is why we have polemized openly against the secretary of the Milan FIM [Italian Federation of Mechanical and Metallurgical Workers]-CISL secretary and against a recent document of the Veneto region's FIM-CISL. We will continue doing so at every opportunity to press the hard and bitter battle in which all of us (and the labor union movement in first place) are engaged against terrorism.

In this spirit, we have decided to constitute, under the new PCI by-laws adopted by the 15th congress, our Labor Council: not to reconstitute the "communist faction" within the trade union movement but to have a base, not clandestine but highly visible, a forum for systematic discussion between labor union and party cadres on issues which we cannot and will not sidestep. We believe--and it is our intent--that this will contribute responsibly and positively to advancing the process of unity and independence of the labor union movement.

9238
CSO: 3104

PUBLIC OPINION POLL GIVES SUPPORT TO GOVERNMENT, PRESIDENT

Lisbon EXPRESSO in Portuguese 1 Mar 80 pp 5,6

[Results of an EXPRESSO-Norma poll. Norma is the Portuguese member of Gallup International]

[Text] The Reason for the Six EXPRESSO-Norma Questions

The questions selected by EXPRESSO exactly 10 days ago to be placed in the survey being published today have the following underlying reasons: It was believed important to find out the degree of prestige of Gen Ramalho Eanes and Dr Francisco Sa Carneiro, not in the abstract, but in the performance of their tasks as president of the republic and prime minister. These questions assume particular relevance due to the existence of certain tensions in relations between the government and the president of the republic. EXPRESSO also intends to continue to measure these degrees of prestige in coming surveys so that it will become possible to confirm how the Portuguese people react from now until the preelectoral period with respect to the political activity of Eanes and Sa Carneiro.

Recent increases in prices, and later certain compensatory measures by the government, brought an intensified currency to the problem of the psychological reaction of the Portuguese people with respect to their living standards, therefore, it is useful to know how they face the change in their living standards from now until the end of the year, which in some way corresponds to their opinion on the economic activity of the government.

Another subject that will very soon be very much in vogue is that of authorization for the installation of private banks, not to replace but to complement the already-existing state banks. EXPRESSO decided for the first time to submit this question to Portuguese public opinion.

Another subject which continues to be very current is the attitude to be adopted by Portuguese authorities on the question of whether or not to go to the Summer Olympic Games. How does public opinion view this problem whose political ramifications are much discussed among us recently?

Finally, Norma itself added a sixth question aimed at finding out the opinion of the Portuguese people on the first month and a half of government activity, and on the other hand, to be compared with the positions of those interviewed with respect to all the other questions asked.

Technical Data

Coverage: Portuguese over 18 years-of-age, residents in the districts of Lisbon, Porto, Beja and Viseu.

Sampling: 100 interviews in each district.

Criteria for selection of the study area: One district where AD [Democratic Alliance] was the predominant influence (Viseu: AD, 64 percent); one district where the PS [Socialist Party] was the predominant influence (Porto: PS, 35 percent); one district where the APU [United People's Alliance] was the predominant influence (Beja: APU, 45 percent) and one district with a more equal distribution of votes (Lisbon: AD, 40 percent, PS, 26 percent and APU, 26 percent). The four districts represent 46 percent of the total number of voters.

Interviews: Direct and personal through a structured questionnaire at the home of the individual interviewed.

Selection: Random, using the "Random Route Method" for selecting homes and the "Kish Method" for selecting the interviewed individual.

Sampling Areas: Twenty localities selected randomly after prior division by district and region.

Field Work: 23 and 25 February 1980.

Maximum margin of error at the district level: Plus or minus five percent within a reliability factor of up to 95 percent with p equaling 50 percent.

Maximum margin of error at the district level: Plus or minus 10 percent within a reliability factor of up to 95 percent with p equaling 50 percent.

Institute responsible for the survey: Norma, Portuguese member of Gallup International.

Eanes: High Rating and Homogeneous Distribution

The first question was: "Do you personally approve or disapprove of the way in which Gen Ramalho Eanes performs as president of the republic?" (see Chart I).

That performance is approved of by 46 percent of those questioned in general, the area percentages being 42, 54, 44 and 34 percent respectively in Lisbon, Porto, Beja and Viseu. This gives Porto and Viseu the largest and the smallest percentage of approving opinions.

Twelve percent of those surveyed disapprove, the highest percentage being that of Lisbon (17 percent), followed by Viseu (14 percent), Porto (8 percent) and Beja (6 percent).

Thirty-three percent of those interviewed said they "did not know," the high percentages of Beja (49 percent) and Viseu (52 percent) being noteworthy. The percentage of those who made no answer is relatively low (9 percent as an average).

Taking into consideration other aspects, which for reason of space it is not possible to publish, it is confirmed that the percentage of men questioned who approved of the political conduct of Eanes was slightly higher by comparison with the percentage of women (64 percent to 45 percent in Porto, 52 percent to 39 percent in Beja, while in Viseu 38 percent of the women approved against 30 percent by the men, and in Lisbon the percentage was the same, 43 percent.

With respect to those who disapproved, the percentages are more defined: 20 percent of the men against 15 percent of the women in Lisbon, 10 percent of the men against five percent of the women in Porto; 10 percent of the men against three percent of the women in Beja and 28 percent of the men against one percent of the women in Viseu.

Disapproval, therefore, appears to be less among women even though approval seems to be equally distributed by sex.

In terms of ages, despite the fact that the difference is not substantial, Eanes receives greater support from the younger age group up to 44 years-of-age. This is confirmed in any of the four districts analyzed, with differences in percentages which range from two percent in Beja to 13 percent in Lisbon.

If we consider the social class, using the traditional three class division, upper-upper middle, middle and low, the greatest support for

Eanes comes from the middle and lower classes (middle class in Lisbon and Viseau and lower class in Porto and Beja). His support is less among the upper and upper middle classes.

Finally, comparing the percentages relative to the political actions of President Eanes with the opinion of those questioned on the government, it is concluded that the most negative opinions on the president come precisely from those surveyed who believe that this government governs much better or better than previous governments.

In turn, approval of the political conduct of President Eanes comes in greater measure from those surveyed who believe that this government governs worse or much worse than previous governments.

Generally, however, it must be recognized that the rating attributed to President Eanes by the survey is very considerable and that it has a certain homogeniety, which beyond the variations cited, is shown by its relationship with the sex, age, social class and choice with respect to the government.

Thirty-eight percent of the Portuguese people, who believe that this government is much better than previous governments, approve Eanes' actions. The percentage of those surveyed who believe that the government is better than those which preceded it is 56 percent.

In a way, the rating obtained by Eanes exceeds the two-way political division visible in a more obvious form in other questions of this survey.

CHART I

	Total	Lisbon	Porto	Beja	Viseu
Approve	46	42	54	44	34
Disapprove	12	17	8	6	14
Do not know	33	32	29	49	52
No answer	9	9	9	1	-

Sa Carneiro: Positive Rating With a More Precise Distribution

The second question of the survey was: "Do you personally approve or disapprove of the way in which Dr Sa Carneiro acts as prime minister and chief of the government?" (see Chart II).

The overall percentage of approval is 35 percent, a higher rating than the overall disapproval rating of 29 percent.

This positive result is seen in all the districts considered: In Lisbon, 32 percent approve against 28 percent who disapprove, and in Porto, 39 percent approve against 33 percent who disapprove. In Beja, the percentages are 22 and 18 and in Viseau 40 and 20 percent.

Those interviewed who said they did not know is 30 percent, slightly lower than those for the first question, with the percentages of Beja (58 percent) and Viseu (40 percent) being reasonably high.

Only six percent did not answer.

In terms of sex, the percentage of men who support Sa Carneiro in Lisbon and Viseu is higher than the percentage of women, the inverse of what is recorded in Porto and Beja.

With respect to those who say they disapprove of the political actions of Sa Carneiro, the percentages of men in Lisbon, Porto and Beja are higher, while to the contrary, among those interviewed in Viseu who did not support Sa Carneiro, the percentage was higher among women.

As far as ages are concerned, with the exception of Lisbon, the age group which most supports Sa Carniero is that above 44 years-of-age. That is the way it happened in Porto, Beja and Viseu. In Lisbon, the percentage is 36 percent for those interviewed below 44 years-of-age who favor Sa Carneiro, against 29 percent of those who support him who are more than 44 years-of-age.

In terms of social classes, the highest percentages of those who approve the political actions of Sa Carneiro in government come from the upper-upper middle class and middle class (middle class in Lisbon and Porto and upper and upper middle class in Viseu). Beja is a strange exception, since those interviewed in this district who most favor Carneiro belong to the lower class although with a small difference relative to the middle class (22 to 20 percent).

Just as in the first question, the bulk of those who say they do not know how to answer belong to those interviewed who do not have any contact with the mass media (86 percent in Lisbon, 62 percent in Beja and 38 percent in Viseu). The rest of those interviewed, who did not have contact with the mass media, expressed themselves systematically in favor of Sa Carneiro as, incidentally, they did Eanes (a significant example is the 70-percent approval of the political actions of Sa Carneiro among those polled in the district of Porto, who declared they had not had any contact with the mass media in the past week).

Comparing the opinions on Francisco Sa Carneiro with those on the Sixth Constitutional Government, it can be seen that those who think that it is much better or better than previous governments also support Sa Carneiro. The inverse is also true.

Comparing the ratings of Eanes and Sa Carneiro, even though for different functions, it can be seen that those of the former are higher than those of the latter except in Viseu.

Comparing the percentages of approval of Sa Carneiro's political actions with those of the government he heads, it was concluded that the former are higher than the latter. Therefore, 35 percent of those polled declared they favored Sa Carneiro, against 24 percent of those polled who believed this government was better or much better than those preceding. This same difference is seen in all districts. In Lisbon it is 32 percent against 22 percent; in Porto, 39 against 28 percent; in Beja, 22 against six percent and in Viseu, 40 to 21 percent.

CHART II

	Total	Lisbon	Porto	Veja	Viseu
Approve	35	32	39	22	40
Disapprove	29	28	33	18	20
Do not know	30	33	21	58	40
No answer	6	7	7		-

Standard of Living: Opinions are Divided With a Certain Optimism

The third question asked was: "In your opinion, in your economic situation, are things going to improve, worsen or remain the same between now and the end of the year?" (See Chart III).

The first prominent aspect of the answers is that of all the questions asked this was the one for which the smallest percentage of those interviewed answered they did not know or had no answer (17 percent compared to 42 percent with respect to Eanes, 36 percent with respect to Sa Carneiro, 55 percent with respect to private banks, 32 percent with respect to attending the Olympic Games and 25 percent with respect to the actions of the government.)

The Portuguese people are in fact very wide awake to the questions having to do with their economic situation.

CHART III

	Total	Lisbon	Porto	Beja	Viseu
Approve	46	42	54	44	34
Disapprove	12	17	8	6	14
Do not know	33	32	29	49	52
No Answer	9	9	9	1	-

A second prominent point was that the sum of the percentages of those who think that things are going to improve or remain the same until the end of 1980 is overall greater than the percentage of those who think that things are going to get worse, which seems to reveal a certain amount of optimism.

Actually, 50 percent think that things will improve or remain the same compared to the 33 percent who believe that things are going to worsen.

However, a separation of the results does not reveal so much optimism. In Lisbon, 40 percent believe that things will get worse and only 39 percent believe they will get better or remain the same. The same negative opinion is seen in Viseu: 45 to 42 percent.

Inversely, in Porto and Beja, reactions seem very much more optimistic (64 percent believes things will improve or remain the same, against 24 percent who think they will get worse in Porto; in Beja it is 51 percent to 34 percent).

In terms of sex, the distribution of opinions is very homogeneous in the districts analyzed among those who think things are going to improve, those who think they are going to worsen and those who think they are going to remain the same.

The same thing can be said about the age groups.

The distribution of reactions among those interviewed by social classes is not much different.

As was to be expected, comparing this answer with the opinion on the government it can be concluded that those polled who believe that the government is much better than previous governments believe that the situation is either going to improve or remain the same, and that those who have negative opinions on government activity believe that the standard of living will worsen.

Therefore, 66 percent of those who consider the government much better, believe that the standard of living will remain the same and seven percent of them believe it is going to improve. Fifty-three percent of those who believe the government is better also believe that the standard of living is going to improve, with 25 percent of them believing that it will not change. Inversely, 52 percent of those who believe the government is worse than previous governments believe that the situation is going to worsen and 38 percent of them believe it is going to remain the same. Eighty-three percent of those who believe this government is much worse than previous governments, believe it is inevitable that the standard of living will get worse and only 13 percent of them admit that it can remain the same.

In short, it seems that despite everything, the overall evaluation on the reply to this question is reasonably optimistic, particularly if one considers that it is taking place immediately after the price-raising measures taken as of the beginning of February.

Private Banks: The Majority do Not Know

The fourth question included in the questionnaire was the following: "Are you personally in favor of, or disapprove of the idea that the creation of private banks be allowed in addition to the state banks already existing?" (See Chart IV).

CHART IV

	Total	Lisbon	Porto	Beja	Viseu
Approve	23	26	23	12	15
Disapprove	22	25	22	9	13
Do not know	51	48	47	77	72
No answer	4	1	8	2	--

The impressive thing in the reply to this question is that 51 percent of those polled do not know and four percent did not answer. Percentages of those who say they do not know are high in any of the four districts, particularly in Beja and Viseu (77 and 72 percent, respectively).

Also impressive is the similarity in numbers of those who say they do not know, with high percentages of women of age above 44 years, of the middle and lower classes and those surveyed who do not have access to the mass media.

Thus, the percentage of the women polled who said they did not know is higher in the four district than the percentage of men (51 percent to 44 percent in Lisbon, 50 percent to 42 percent in Porto, 86 percent to 71 percent in Beja and 86 percent to 56 percent in Viseu).

In terms of age, the compared percentages of those polled who are more than 44 years and those who are less, who said they did not know, are as follows: 60 percent to 35 percent in Lisbon, 64 percent to 32 percent in Porto, 78 percent to 70 percent in Beja and 83 percent to 63 percent in Viseu.

In Porto, Beja and Viseu, the highest percentages of those who do not know are found in the lower class and in Lisbon the percentage of the middle class is the same as that of the lower class.

The great majority of those polled who had no access to the news media, either do not know how to answer the question or in a very much lower percentage say they approve the creation of private banks.

Among those who have an opinion, opinions are very divided: 23 percent are in favor and 22 percent against (with 26 percent against 25 percent in Lisbon, 23 percent against 22 percent in Porto, 12 percent against nine percent in Beja and 15 percent against 13 percent in Viseu).

In terms of sex and age, the distribution of those polled who are for or against is relatively homogenized, although in the former there are higher percentages in the age group up to 44 years-of-age and among the latter, in Beja and Viseu, in the age group above that age.

In terms of social classes, the upper and upper middle class is slightly more in favor (except in Viseu), the middle class is divided between a favorable and an unfavorable position, with a predominance of the unfavorable position. The lower class is divided homogeneously, with a slight predominance of the favorable position.

Comparing this reply with the opinion on the government, it is found that those who favor the government also have a tendency to favor the private banks or do not know how to answer, and that those who are markedly against the government have fewer doubts about answering this question and they do so in a negative way--against private banks. In short, the percentage of those who are not knowledgeable about the question being discussed is very large, and the differences of opinion on the positive and negative aspects of the authorization of private banks are also very great. In a tangential way, the most accentuated opinion, however, is favorable to the creation of private banking institutions.

Go To Moscow: Yes, Of Course

The fifth question used in the EXPRESSO-Norma poll was the following: "Some countries, using the argument of the invasion of Afghanistan by the Soviet Union, expressed the intention of not going to the Moscow Olympic Games. Do you believe that Portugal should or should not go to the Olympic Games?" (See Chart V).

CHART V

	Total	Lisbon	Porto	Beja	Viseu
Should go	56	57	63	30	36
Should not go	12	14	12	6	7
Do not know	28	25	21	63	57
No answer	4	4	4	1	-

The percentage of those interviewed who declared themselves in favor of going to Moscow is significant: 56 percent, with 57 percent in Lisbon, 63 percent in Porto, 30 percent in Beja and 36 percent in Viseu.

On the other hand, the percentage of those who believe Portugal should not go is very low: 12 percent (14 percent in Lisbon, 12 percent in Porto, six percent in Beja and seven percent in Viseu).

The percentage of those who say they do not know is not very high in total (28 percent) and is that way in Lisbon and Porto (25 and 21 percent, respectively).

However, it is very high in Beja and Viseu (63 and 47 percent). Apparently the districts of Lisbon and Porto reveal ideas already acquired on this subject, unlike what is happening in Beja and Viseu, although in all districts the percentage in favor of going is higher than that against.

The opinions expressed are distributed proportionately by sexes, ages and social classes.

Comparing this reply with the opinion on the government, an original situation is found; whether they are government supporters or its detractors, they believe, in very close percentages, that Portugal should go to Moscow, although the former contain higher percentages against going than among the latter.

Thus, among those who believe that this government is much better than previous governments, 79 percent favor going to Moscow and 21 percent are against. Among those who believe that the government is better than previous governments, 52 percent favor going and 28 percent are against it. Among those polled who believe this government to be worse than previous governments, 71 percent favor going and three percent are against. And these percentages are 62 percent and 14 percent among those polled who believe this government is much worse than previous governments.

In short, the number of political positions taken aimed at causing the absence of Portugal at the Moscow Olympic Games do not appear to have found significant support in Portuguese public opinion.

Government: A Country Divided

The sixth question introduced in the questionnaire at the initiative of Norma was the following: "In your opinion is the Sixth Government governing much better, better, similar to, worse or much worse than previous ones?" (See Chart VI).

CHART VI

	Total	Lisbon	Porto	Beja	Viseu
Much better	4	3	5	-	-
Better	20	19	23	6	21
Same	27	25	24	27	51
Worse	17	14	21	24	13
Much worse	7	10	4	2	7
Do not know	19	25	14	34	8
No answer	6	4	9	7	-

The highest percentage is that of those who believe that this executive is governing in a way similar to previous governments: 27 percent, with 25 percent in Lisbon, 24 percent in Porto, 27 percent in Beja and the high percentage of 51 percent in Viseu.

Those who openly declare themselves for or against the government appear to be evenly divided.

Thus, of the total, 24 percent think that the government is governing much better or better than previous governments, and 24 percent believe exactly the contrary, that it is governing worse or much worse than previous governments.

These percentages are: In Lisbon, 22 percent and 24 percent; Porto, 28 and 25 percent; Viseu, 21 and 20 percent. Only in Beja is the negative opinion significantly higher than the negative [as published] (26 percent to six percent).

The number of those who do not know is significant overall (19 percent), particularly in Beja (34 percent) and Lisbon (25 percent).

The distribution by sex, age and social class is relatively homogeneous.

At first sight, it could be said that this opinion on a month and a half of government corresponds in a broad sense to the political division of the country observed in the 2 December elections last year, it still being too early to see how the political actions of the government are going to affect public opinion.

8908
CSO: 3101

NEW DIRECTIONS APPEAR IN AFRICAN POLICY

Lisbon DIARIO DE NOTICIAS in Portuguese 1 Feb 80 p 13

[Article by Luis Cid Pinto]

[Text] Late to come to decolonization, the Portuguese are perhaps farthest behind in the elegant neocolonialism exercised from all directions in Angola.

This is the neocolonialism of which one must speak, without connotation or preconception, to point to the foreign influences on a country whose major concern is still focused on literacy, nutrition, vaccination, on its ideological manifesto. Unfortunate terminology aside, neocolonialism--the neocolonialism of our time, one of noninterference, fully acceptable--falls not only upon the African countries but on all the paths of the international community and, in most cases, is based on reciprocity.

After the failure of the federal solution, Portugal has been obliged to refine its interests, and the former colonies offer the best prospects for placing its technological product. Meanwhile, among a broad range of candidates in the grand competition for Angola's potential, Portugal is losing out.

With the nationalization of Companhia dos Diamantes, with the recent loss of a significant volume of shares in mining companies, Portugal is being sapped of the capital it has invested in Angolan territory.

With regard to the diamonds, the Sa Carneiro government has complained of a "discriminatory attitude" against the interests of the Portuguese public sector to the advantage of other foreign investors. In reply, it has nationalized Angola's share in the Sociedade Portuguesa de Lapidacao. Irrespective, however, of all this gem polishing to be gained, the problem of the diamonds not only presents the facet mirroring the economic and financial conflict, but another multifaceted side, whose observation is more difficult and ambiguous.

There persist the inevitable tensions that the years have not erased, the sign of a neurophysiological division between two states, which men will have to overcome.

To overcome this division required that the mediation of two presidents--Eanes and Agostinho Neto, who met on Guinean territory in June of 1978--would result in the "Spirit of Bissau," vaulting lightly and mysteriously over all the barriers.

Within this spirit, given space and time, there grew between the two nations a stated and shared veneration for the "humanist ideals" of Amilcar Cabral, for the initiatives against "apartheid" and for the independence of Namibia and Zimbabwe, presaging lasting homage to all the heroes of emancipation.

Angola required this respect for its political and sociological discourse. In exchange, where ideological differences were concerned, it promised it would always hold, without reservation, that "the path chosen by a people is an issue which concerns that people alone."

Currently, Portugal's foreign policy is aimed at embodying the spirit (dream) of Bissau in fact, in protocols, in a practical program based on understanding, in intensive trade cooperation. Ultimately cementing relations of the strictest equality, the two countries could interact without false fears, attentive to tradition but without a continuing mythical communion.

This is why Pfeitas do Amaral has declared that "although the government wishes to maintain excellent relations with Lusophone African countries, this will not prevent Portugal from reacting to negative acts by these countries."

This is why, for the Sixth Government, the "homogenization" of foreign policy is founded on strategic objectives.

Thus the Portuguese officials are willing to understand the realities of a country which has abandoned patterns of servitude and is hence utterly absorbed in issues of defense, especially in economic and military sectors. On the other hand, the Portuguese are demanding equal tolerance for political trends that are flowering in this corner of Europe, as well as tolerance for the alternations of these trends or their balance, consistent with present pluralist precepts.

"The seizures, nationalizations and state intervention in private enterprises are instruments used by the revolution to broaden the socialist sector of the economy, to act more decisively in creating the material, scientific and technical bases for socialism. The broad economic sector which the state is coming to control will thus permit the transformation of production relations, so that economic independence may be achieved along with political independence." So reads a document from the Department of Political and Ideological Education of the MPLA, published in 1978.

In Lisbon, these explanations are accepted; equally, Lisbon wishes to make it clear that the adoption of a different path does not represent any threat to the project in which the Angolans are engaged, looking to their salvation, the cure for their afflictions.

How long will it last, this phase in which the "good intentions" already demonstrated on both sides appear to have disintegrated?

6362
CSO: 4401

CGTP LEADERSHIP SHOWS SIGNS OF INTERNAL DISAGREEMENT

Lisbon DIARIO DE NOTICIAS in Portuguese 1 Feb 80 p 14

[Article by Maria Guiomar Lima]

[Text] This week, a little less than a month before its Third Congress, the CGTP [General Federation of Portuguese Workers] has experienced something unprecedented. There were reports of "divergencies within the secretariat." There was talk of majority and minority groups, of trends, of lines of action and, ultimately, of all that is contrary to the solidity or cohesion which some see as a defect and others see as the major virtue of the federation that represents 93 percent of the organized labor in our country.

If it had any basis in fact, the report will still be making headlines, especially because, as they were reported, the divergenices were not outside the CGTP organization this time, but within its directive organs.

In the end, however, "the mountain was no more than a mole hill," and the minority currents that met in Coimbra (and will meet again) to contest the action of the CGTP's executive and the "bureaucratization of the union movement" are actually less representative than some had feared and others would have liked to believe. Nor are they headed by any of the union directors that came to be identified as their "leaders."

At first glance, these are union members linked to the extreme leftist movement, who have decided to present alternatives to the theses prepared months ago for the congress, which is scheduled for the first weekend in March. Instead of submitting these documents for "internal discussion," they have drafted them separately and are going to present them independently, certain of defeat but preferring the publicity that their stand has already won and will continue to receive.

"But these news stories also had broader purposes and, in my view, are linked to events at the last Congress of the PS [Socialist Party] and to the implications of those events at the union level," we were told by Manuel Lopes, director of the textile workers and member of the CGTP Secretariat. Lopes came to be indicated as one of the line chiefs of the above-mentioned minority currents.

In fact, the identification of the four supposed "leaders" of the internal dispute in the CGTP was not far off the mark. Kalides Barreto, Santana da Costa, Joaquim Calhua and Manuel Lopes represent, to some extent, the "new wave" that emerged from the 1977 Congress, and three of them do not hide their political ties to the UEDS and the Base-FUT [expansion unknown], precisely the two political organizations which, in the understanding of some PS strategists, could be the preferred allies of the PS union policy.

Obviously, the reverse reasoning could be applied. It could be argued that a good way to bring down the "chiefs" out of step with the CGTP Secretariat would be to impute to them union connections and intentions which they have never had. Then their failure to win election to the executive body that will come out of the March congress would certainly be much more easily accepted.

"No, the CGTP Secretariat has never functioned in terms of Party A or Party B, and I'm certain it will continue to be this way," Manuel Lopes argues. According to Lopes, the general similarity of views betwee the CGTP and the Communist Party is "only a similarity and not a carbon copy," which can be taken either way.

Like most of the leaders--and members--of the unitarian union movement, Manuel Lopes defends unity, not as a tactic but as a strategy, and he feels that the best way to defend the Portuguese labor movement is to keep it united. He told us that this is achieved "through internal debate, an exhaustive search for consensus, and when there is no consensus it is best not to take a position."

Admission to the CES and Invasion of Afghanistan

The CGTP's diplomatic offensive to gain admission to the CES [European Union Confederation] may end by providing, indirectly, one of these "tests in the search for consensus."

Seeking the support of the most diverse foreign union organizations, the CGTP scored points with the recent Portuguese visit of Edmund Maire, secretary general of the CFDT [French Democratic Confederation of Labor], (linked to the French Socialist Party). From all indications, Maire is disposed to lend the full support of the union organization he represents to the CGTP membership candidacy.

On returning to Paris, however, one of the CFDT delegates announced that support for the CGTP depended on the latter's public condemnation of the Afghanistan invasion.

The leaders of the unitarian union movement are convinced that, in this case as well, "the news stories are not entirely accurate."

They argue that during the CFDT visit to our country the international political situation was discussed, and when the Afghanistan issue was raised, "nothing was said that would lead us to expect a demand of this kind."

Moreover, relations between union bodies of different countries generally concern labor more than partisan politics, and priority is given to strictly union issues, which are, after all, the primary reason that brings them together. As a rule, for a union federation to recognize and maintain relations with another, the most important consideration is whether the latter represents the workers, defends their interests and observes the rules of union democracy.

"Edmund Maire publicly declared his support for the CGTP," Manuel Lopes told us, "and I see no reason why, after 8 days, the CFDT position would have changed."

Supposing it has changed? Would the CGTP be able to prove its ability to reach internal consensus, to find a solution that could meet the demands of the CFDT and, at the same time, be acceptable to its more orthodox leaders?

It is hard to predict, but from all indications, if this is the price the CGTP must pay for membership in the CES, it is going to be considered much too high, and will also be seen as "internal interference which, once accepted, could become extremely dangerous."

It is unfortunate, though, that the condemnation has not come spontaneously. After all, when the world situation has changed so much, to continue to defend the spirit of Helsinki demonstrates, at the very least, an astonishing lack of realism.

6362
CSO: 4401

PCE SEEN TO BE INCREASINGLY ISOLATED IN CARRILLO'S REPORT

Madrid EL PAIS in Spanish 5 Feb 80 p 8

[Text] Santiago Carrillo's report to the Central Committee of the PCE [Spanish Communist Party], which met in Madrid last weekend, evidenced the extent to which his party has just been marginalized.

Perhaps the most notable thing about such marginalization of the communists is that it should have occurred after a lengthy and very critical stage--nearly 2 years covering the period of the former legislature--when the UCD [Democratic Center Union] and the PCE agreed to confine and block the PSOE [Spanish Socialist Workers Party]. As is known the local elections in April 1979 and the municipal pact of the left caused a change in the political panorama.

The centrists began to negotiate with the Socialists about the terms of a limited consensus with the idea of facilitating the approval of the organic laws of constitutional development. And the communists, having lost their contacts with Prime Minister Adolfo Gonzalez Suraez and their honeymoon with the UCD over, understood that the maintenance of the municipal pacts with the PSOE was the only way for them to achieve some institutional presence at the centers of power.

However, this lucky and profitable bigamy of the PSOE reached a crisis on the occasion of the CEOE-UGT [Spanish Confederation of Employers Organizations-General Union of Workers] agreements, the Workers' Statute, and the framework-agreement. Trade union strategy was an excessively important matter for the PCE as was its willing acquiescence that the Socialists should prefer the possibility of an agreement with the centrists compared to the class agreement proposed by the communists. At that point the PCE executive attacked the UCD-PSOE alliance.

In his report to the Central Committee, Santiago Carrillo poured cold water on the cadres and activists who had clashed with each other in the hardening of positions in the fall of 1979 and who contemplated with

barely concealed pleasure the opportunity to declare an open war not only on the government but also on the PSOE. On top of the still unallayed bitterness of the electoral results of 1977 which set at a very low level the parliamentary presence of the PCE and consecrated the PSOE as the dominant force of the left and in addition to the sensation of having first been used and then betrayed by the UCD came the success at the urns of the Portuguese communists guided by a typical strategy of the Third International, the sectarian hardening of the French communists who initiated the controlled explosion of "Eurocommunism," and the return of the Manichaeanism, paranoia, and rigidity of the "cold war" across the world. Sectors of the PCE sensitized to this new climate, additionally burdened by growing unemployment and the effects of the crisis on real wages, were willing to accept the possibility of seeking refuge in their winter quarters and to reject the Socialists as traitors or as individuals "sold out" to the enemy's camp. However, Santiago Carrillo expressed the opinion that the break of the unity of the left in France by the PCF [French Communist Party] was "the greatest setback suffered by the European working class in the last few years."

The warnings addressed by Santiago Carrillo against that slide toward the radicalization of a section of his rank-and-file targeted the resurgence of aggressive pro-Sovietism at the international level and of aggressive anti-Socialism at the domestic level within the PCE. His analysis of the occupation of Afghanistan and of the "Sakharov case" left no occasion for the Soviet Union's exculpation and made explicit and unequivocal his complete disagreement with those sectors in the PCE which approved the Soviet measures as a consequence not only of the "traditional attitudes" of the old activists but also of the "organized and guided circulation" of a propaganda whose origin is--even though Santiago Carrillo did not go so far with his words--the Soviet Unin Itself.

Even more notable was Santiago Carrillo's mention of his considering a confrontation with the PSOE regarding the Workers' Statute and the framework-agreement. "I believe that we must make it clear that what happened in connection with these issues, while not a success for the PSOE and the UGT, was not one for the PCE or the Workers Commissions [CCOO] either." Perhaps to avoid the harshness of the terms "failure" and "setback" Santiago Carrillo used an ugly and infrequent gallicism: "I would rather say, on the contrary, that it was a serious 'insuceso' [lack of success]."

The results of this "insuceso," one should add, are not exclusively the PCE's confrontation with the followers of the UGT and the possible defeat of the CCOO in some industrial sectors but rather that they go beyond trade union parameters and have an impact at the political level: The break of their municipal pact with the Socialists, the greater isolation of the PCE itself, the rise within the PCE of factions hostile to Eurocommunism, the duplication within our borders of the "cold war" climate, and the market hardening of all positions in a barely stabilized democracy. That Carrillo should perceive these dangers and should wish to avoid them appears to be a valid conclusion from a reading of his report to the PCE's Central Committee.

2662
CSO: 3110

SOCIALISTS' PARTY SECRETARY ANDERSSON WOOS LIBERALS, CENTER

Stockholm DAGENS NYHETER in Swedish 11 Feb 80 p 30

[Article by Sven Thiessen: "Sten Andersson (Social Democrat): 'We Must Form a Joint Front Against the Conservatives'"]

[Text] "If the Center Party and the Liberal Party stand by their programs for the welfare of all people they ought to break out of the stranglehold of the Conservatives and approach the Social Democrats." This is what Social Democratic party secretary Sten Andersson says in a TT [Press Wire Service, Inc.] interview.

According to Sten Andersson, such a political reorientation could lead to narrower social gaps, increased economic democracy and greater employment.

"The Center Party and the Liberal Party are doomed to be swallowed up by the Conservatives if they do not break away," Sten Andersson believes.

"I have no right to suggest to these parties, but I believe that both the nation and the parties would have a brighter future if the Center Party and the Liberals kept to their goals of social justice instead of letting themselves be tied down by increasingly stronger rightist forces."

Sten Andersson believes that a coalition is totally out of the question, but political cooperation can take place in so many other forms, for example in the parliamentary committees.

Joint Goal

The party programs also present a basis for cooperation in certain areas. The Social Democrats and the Liberal Party, for example, have some joint goals although the means for achieving them differ to some extent. The same applies to the Center Party.

"If the parties were to find their way along these lines, a breakup of the present bloc politics, which are very unfortunate, could take place. They lead to confrontation instead of unifying solutions.

A fresh example of the negative sides of bloc politics is, according to Sten Andersson, the fight which has occurred after the government proposed that state subsidies for the municipal regions should be suspended.

The center parties are unwilling to tear up the decision concerning subsidies once made by Parliament but they must bend to the will of Minister of Economics Bohman.

"If the Center Party and the Liberal Party were to break away from the Conservatives a better solution could be achieved on this issue, as on many others," Sten Andersson says.

"I presume that there are many people within both the Liberal Party and the Center Party who feel great distaste for cooperation with a Conservative Party that does not share their values. Such a distaste becomes natural when the parties, as it appears, are on their way to abandon their goals. We, for our part, have never done so."

Dark Picture

"Today, Sweden faces enormous problems," Sten Andersson continues. What we Social Democrats are afraid of is that the pessimism which strikes its claws into more and more people will become an end in itself.

"Politics and economy are in many ways a question of psychology. It can easily happen that the future will become dark if an excessively dark picture is painted of it.

"Sweden, which not too long ago had one of the world's strongest economies, now suffers under a terrible deficit in the budget and the exchange balance. Reports are beginning to flow in about plant closings, unemployment, steep price increases. On top of all this there is talk about an approaching economic depression and a growing threat of war.

"There is surely a great deal of nourishment for the pessimism, but the task of the politicians is to indicate ways out of the difficulties.

"The first thing we ought to deal with is a reconstruction of Sweden's economy. This is why in Parliament we have presented the first portions of a program for putting strength back into the Swedish economy.

"We Social Democrats believe that a better Sweden can be created. In order to reach that goal we are prepared for discussion and debate to which we invite the entire Swedish people to participate since this is an issue for everyone and not only for the Social Democrats.

"It should be possible to set up economic goals and new goals for democracy beyond the difficulties in which we find ourselves today. If we don't do that, we could easily end up in even worse trouble. This was Wigforss' method of working, and I believe in it."

Negligence

"Which do you believe are the things most neglected by the government?"

"There are many things to choose from. But the greatest omission, as I see it, is that they have not undertaken the measures which could recreate belief in the future. Instead, they follow an oldfashioned, superconservative policy of restraint which simultaneously increases unemployment and company profits. Investments, our building blocks for the future, have dropped alarmingly.

"This is why we lag behind compared to many other nations. In Social-Democratic-governed Austria and Norway there is high employment and a low rate of inflation. Why should not Sweden as well succeed with such a policy?

"In the end it is inflation which causes growing rifts. This is why we need price freezes on more goods than we have price freezes on today; we must subsidize away some of the steep rent increases and price increases on food.

"We must have intensified taxation of capital gains and better controls of the money which the wage earners have transferred to the companies and which is flowing out of the country. Only then can we have calm collective bargaining without the threat of conflicts."

Will not Be Split

The Social Democrats and the Liberal Party support alternative 2 in the upcoming nuclear power referendum, that is to say abolition after the presently planned expansion has been completed.

"We know that there are large groups within the party which want to support alternative 3 (Center Party and Left Party-Communists) and there are some who favor alternative 1 (Conservatives). But I'm convinced that this will not have the divisive effect which some debaters have claimed."

Alternative 3 advocates abolition of all nuclear power within 10 years and an immediate halt to the planned expansion.

"I have complete respect for those who are prepared to assume the consequences of rapid abolition, that is to say a lower standard of living and unemployment. On the other hand, it is deception of oneself and others to imagine that this can take place without great sacrifices."

Should number three win, our present economic difficulties would become nothing short of catastrophic. I don't understand why Falldin doesn't seem to realize this. On the other hand I think the Communists have grasped it, even if they maintain the opposite."

"Such a crisis would create fertile ground for strong conservative forces, but also for the Communists. This is consequently what Falldin contributes to. That is not exactly what is called great statesmanship."

11949
CSO: 3109

LIBERALS' LEIJONBORG: CENTRALIZATION MUST BE REDUCED

Stockholm DAGENS NYHETER in Swedish 12 Feb 80 p 6

[Interview by Dick Ljungberg of Lars Leijonborg, head of the Liberal Party office in Parliament: "Lars Leijonborg (Liberal): 'Our Policies More Important Than Cooperation'"]

[Text] Lars Leijonborg was born in 1949 and graduated from a school of social studies (a field in which he never worked). At age 15 he entered the Liberal Youth Association [FPU] in Solna and was FPU chairman during 1971-1973. After that he worked with matters of health care at the regional council level until in 1976 he became political secretary -- together with Hans Bergstrom -- for the then Liberal Party leader Per Ahlmark. After some time at the departments of Labor Market and Education in 1978 -- when the Ullsten government came into power -- he became head of the Liberal Party's office in Parliament.

"There is now a strong feeling in the Liberal Party that what is important is not discussion about what party we are to cooperate with. The most important thing now is instead to make clear what tasks a small party will have in the 1980's," says the head of the parliamentary office of the Liberal Party, Lars Leijonborg, in this DAGENS NYHETER interview.

As head of the Liberal Party office Leijonborg has a great deal of insight into the activities of the party both in Parliament and in government. He just turned 30; at age 15 he joined the Liberal Youth Association and was its chairman for a few years at the beginning of the 1970's.

There are two issues which Leijonborg wants to put first as liberal tasks in the 1980's: a "more human" industrial society in which people are given a chance for more determination of their own situation and Sweden's responsibility in reducing the gaps between rich and poor nations.

"The centralization has gone too far. It is frightening how much is lacking in community spirit, for example in many residential areas," Leijonborg

says. "The solidarity of the old agrarian society and the popular movements has been replaced by privatization and professionalization of tasks. The result has become that people feel unhappy in their surroundings and powerless."

And the centralism of the Social Democrats -- in which all problems must be solved in the same way everywhere -- does not increase people's possibility to influence.

"Take for example community radio; I myself participated in studies of it. The Social Democrats say that it is wrong that organizations should be allowed to make their own programs. But when one gets out to the places that have community radio one is met by an enormous enthusiasm."

Setback Is Imminent Concerning the Welfare of the Children

A breakthrough for new sexual roles is the precondition for being able to create a new feeling of togetherness, he believes, for example that fathers are allowed greater opportunities for spending time with their children.

"But right now I have a feeling that a setback is imminent because many people construct an opposition between equality and the welfare of the children. It is said that the children must pay for the equality, which may be due to, among other things, that we have not sufficiently coped with the questions of quality at the day care centers."

"Parents must also be able to take time off to become more involved in the day care centers. This could create problems in the labor market of the 1980's, but I think it is necessary."

There are hopeful signs for reduced differences in the world after a series of underdeveloped countries have now gotten competitive industry started. It is a liberal task to see to it that Sweden continues to support these efforts, Leijonborg says. And there are still many countries which have not speeded up their development.

Risk That the Tolerance Will Decrease

And there are risks for setbacks: protectionism and demands for suspended aid, for the reason, among others, that the Swedish economy is now so poor.

"It is completely wrong to believe that industrialization in underdeveloped nations is a threat to our employment. On the contrary, it increases our export opportunities."

"A weak economy is also included, in which increases in the standard of living become small or perhaps fail to appear entirely year after year; there is danger that extremist groups are beginning to win sympathy, that tolerance of those who think differently is decreasing just as the feeling of

solidarity, one shouldn't give so much to the social services, for aid to underdeveloped nations, not accept immigrants."

Are there such tendencies in Sweden?

"Yes, some," Leijonborg believes. "Some of the Conservative opinion poll successes can certainly be explained by a change in the entire climate of debate."

The Liberal Party is completely prepared to stay in government the entire mandate period, Lars Leijonborg states. For another few years Sweden needs a government without Social Democrats, after their long one-party rule.

"But I hope that the days of bloc politics will soon be counted and that we will have greater openness. The group of voters whose only interest seems to be to keep the Social Democrats away at all cost is perhaps also decreasing the further we get from the time when they were in power."

In the long run I believe that there are prospects for cooperation for example between us and the Social Democrats. Above all in order to achieve certain political goals, for example greater international solidarity. Consequently, even if I am one of those who consider such cooperation both conceivable and desirable some time during the 1980's, I would like to say that I do not view a Liberal-Social Democratic cooperation as an ideal for all future.

Cooperation not Good in the Long Run

And actually cooperation in any direction is not good in the long run, in Lars Leijonborg's opinion, since this always implies that one's own party more or less has to give up part of its policies.

There are some justifiable points in the present contempt for politicians, he believes and picks as an example that Olof Palme and Gosta Bohman ended up supporting different alternatives in the national referendum despite having the same basic view of the matter.

"When party tactics overshadow everything else in this manner it is not strange that people feel distrust."

To some extent this is also an expression of the new polarization in which people think a politician who sees things from two sides speaks nonsense. Then it is serious, for it can create a debate without nuances.

"This is perhaps also part of the problems of the Liberal Party," Lars Leijonborg says. When we defend well-balanced positions it often seems unclear in some way, and in today's climate of debate there is little demand for such solutions."
11949
CSO: 3109

SOCIALISTS' LONNQVIST: THREAT FROM RIGHT WORSE THAN CP'S

Stockholm DAGENS NYHETER in Swedish 16 Feb 80 p 6

/Interview by Ake Ekdahl of Ulf Lonnqvist, Social Democrat: "Most Important Is to Protect the Front Toward the Right"/

/Text/ Ulf Lonnqvist, Social Democrat, ends the DAGENS NYHETER interview series with younger politicians about the politics of the 1980's.

Ulf Lonnqvist, who now works at the Social Democratic parliamentary office, was born in Malmo in 1936. He entered the SSU /Swedish Social Democratic Youth Association/ early and was very active in student politics in Lund. He became chairman of the student organization --1964 -- and also received an M.S. in social studies. In 1966 Lonnqvist came to the Department of Agriculture in Stockholm and was a state secretary there during the last year and a half before the 1976 change of government. Since 1970 he has been chairman of Tyreso workers' commune and is also a member of the executive committee of the party district in Stockholm province. Ulf Lonnqvist is chairman of the Table Tennis Association and is a member of the National Sports Administration.

A growing VPK /Left Party-Communists/ creates problems. Even if the VPK does not get new voters from the working class their increased voter support causes uneasiness. This was said by Ulf Lonnqvist, one of Palme's so-called boys who think and write about the party's future.

"Social Democracy is deeply distrustful of communism. This is why drawing up the boundary line toward the Leninists is decisive for the Social Democrats," he says.

However, Lonnqvist relies on democratic socialism to possess the power of resistance necessary for coping with other opinions within socialism.

"Before the difficult tests awaiting the Swedish people during the 1980's the most important thing is to defend the front toward the right," Lonnqvist says. "We must oppose the efforts of the Conservatives to worsen the situation for those social groups which are worst off. The attacks from the left do not affect security in society in the same way but apply more to ideological issues."

Conservatives Are Excluded

"Today the VPK is well adjusted in Parliament. But very little is known about how the VPK will act in the future. What will happen if the Leninist-type doctrines to which they adhere are allowed to come into full bloom is something else."

Speaking of party cooperation, he emphasizes that the Social Democrats have never had any organized cooperation with the VPK. It is only the Center Party which has engaged in a similar thing, Lonnqvist says.

"The Social Democrats are trying to get so much support from the voters that a Social Democratic government can be formed. This does not exclude that we seek support for our policies from both the left and the right."

"In the choice between the Liberal Party or the Center Party as cooperation partner the selection makes no difference. Only the Conservatives are excluded. With them there are no points of contact," he says.

Today's Blocs Are Artificial

It will become necessary to create broad majorities in Parliament, but there are today no preconditions for government cooperation across the bloc lines in the center, in Lonnqvist's opinion.

"The blocs we have today are artificial. It is not so that one half of the Swedish people stands against the other. If the three bourgeois parties had not been glued together in the government, the Social Democrats on the one hand and the Center Party and Liberal Party on the other would find each other on a number of different issues," he believes.

He also recalls that the Social Democrats have made several attempts to break down the bloc boundaries.

The Haga agreements during the equally balanced parliament was one way. When the three-party government failed the Social Democrats assumed a great new responsibility for the country to get a government by allowing Ola Ullsten and the Liberal Party to come forward. During the spring there were also possibilities for new broad majorities, Lonnqvist remembers.

The LO [Swedish Federation of Trade Unions] newspaper recently contained a desperate debate article which demanded that the party again become a popular movement in the sense that the complaints of the voters are taken

into consideration and that the party takes their side against the powers that be and against bureaucracy.

Lonnqvist objects to such assertions.

"Those who claim that the Social Democrats are not a functioning popular movement are wrong," he says, but admits that the means for achieving greater internal democracy can be discussed and refined.

"I have participated for so long in the basic work in the residential areas in associations and at places of work that I know what I'm talking about when I state that we really listen to what the people wants."

We Are no Isolated Types

"But we must find better forms for our work. The fast pace in the world of labor makes it difficult to discuss politics there. Then we must find new forms. In the age of television we must seek people out at home."

These are no strange isolated types who are members of the neighborhood associations, at the places of work and in the residential areas. They are ordinary people who know what is going on in society. Their reports then go on up through the party to the party leadership.

Lonnqvist also admits that reforms can go wrong, if the preconditions change direction. Then there is reason to rethink. As an example he takes the violent shifting around of labor in the 1950's and 1960's.

"The shifting around created jobs and economic growth which was necessary in order to solve other difficult problems. People improved their situation materially but new problems were created at the same time, primarily in the large cities."

Environment Big Issue in the 1980's

People in the big cities feel concerned about child care, long commutes to work, about a faster pace, about layoff problems. These are questions we must solve. We were on the way to achieve regional balance when the moving vans started rolling again under the three-party government.

Lonnqvist believes that environmental problems will become one of the big issues of the 1980's and that only the Social Democrats can conduct an active environmental policy without side glances at profit interests for industrial or land owners.

"We live dangerously today. The attacks on people's health which we experience today are a result of the use in the 1950's of poisons and chemicals. The poisons used today are infinitely more numerous and more dangerous. It provides a gruesome premonition of what we can expect if we do not put a stop to it."

"The Center Party, the so-called environmental party, always lets the environmental interests yield to the land owners' interests when those two collide," Lonnqvist says.

Better social economy is the other big issue that requires tough measures. There is no longer a surplus from which to create reforms. We must redistribute what exists from those who are well off to those who are in need through for example contributions, subsidies and taxes.

11[illegible]
CSO: 3109

FALLDIN'S NUCLEAR POLICY PREPARES WAY FOR GROWTH OF CP

Stockholm DAGENS NYHETER in Swedish 21 Feb 80 p 8

/Commentary by Sven Svensson: "Falldin Paves the Way for a Growing VPK and a New Environmental Party"/

/Text/ Thorbjorn Falldin has maneuvered himself into a terrible political dilemma. He became prime minister in the bourgeois three-party coalition with nuclear power hawk Gosta Bohman's blessing and is simultaneously involved with VPK /Left Party-Communists/ members Lars Werner and C. H. Hermansson in alternative three for the abolition of nuclear power.

Politically, nothing good can come for the Center Party from such flagellation between the extremes in Swedish politics. This was also confirmed by the opinion polls after the election. The Conservatives and the VPK gain, while primarily the Center Party, but the Liberal Party as well, decrease. It is impossible to avoid the conclusion that Falldin is chiefly responsible.

Even so, Falldin has not yet completed his real test of manhood on the political scene. The opinion studies around nuclear power are considerably more uncertain than ordinary voter barometers. Nevertheless, many things indicate that the referendum, if nothing unforeseen happens in the final stretch, will result in alternatives 1 and 2 together receiving more than 50 percent of the votes cast. For the time being, at least, this must be the political hypothesis.

In the referendum it is impossible to lay down the energy policy for several decades to come. The main issue for the voters will be whether the four completed reactors are to be fueled or not. It was this which caused all the fuss in the first Falldin government. On this point the result of the referendum cannot be ignored or postponed, without it leading to a government crisis or new elections.

Others More Suited

The main political question before the referendum is whether Falldin can fuel four new nuclear reactors and still keep his political credibility.

Falldin himself believes that this is possible. If a majority of the people votes for alternatives 1 and 2 Falldin considers himself released from his moral verdict rejecting nuclear power.

That all voters who voted for Falldin because of his opposition to nuclear power have accepted that such a result of the referendum would constitute a moral release for Falldin is unlikely. Political forces other than Falldin must be more suited for fueling new nuclear power plants and for supervising a certain expansion of nuclear power.

An outcome which means fuelling of the four completed nuclear power plants will therefore in all likelihood bring with it new internal friction between the green center and the country center, at the same time as Falldin's own political credibility gets another blow.

In the 1979 election the Center Party lost 6 percent of its voters, primarily to the Conservatives. The Conservatives appeared as more reliable from a general bourgeois point of view.

Ideology and Party Tactics

Instead of awaiting the outcome of the referendum and allowing Ola Ullsten to continue, Falldin after the 1979 election demanded to become prime minister at any cost. If Falldin betrays his opposition to nuclear power he risks losing new voters to the Left Party-Communists. If Falldin breaks up the three-party government over the fueling of new nuclear power plants, he will once again play into Bohman's hands.

In the VPK there is a nucleus of old reliable communists who are in favor of nuclear power. Another nucleus, which came to the VPK during the 1970's, is opposed to nuclear power, just as the leadership.

The VPK's opposition to nuclear power has in part an ideological background. Capitalism needs a constant addition of cheap energy in order to function. By demanding the abolition of nuclear power the VPK believes it can hasten the crisis of capitalism and a transition to a socialist planned economy.

The VPK's attitude toward nuclear power contains a party-tactical purpose. The popular front between the VPK and the Center Party before the referendum has contributed toward making the VPK more housebroken in the eyes of many voters. The VPK has thereby gotten a chance greatly to broaden its voter base.

If Falldin fuels four new nuclear power plants and supervises the continued expansion of nuclear power, the Center Party will lose its credibility for the voters who are opposed to nuclear power.

In that situation the VPK appears as the most consistent nuclear power opponent. Werner then has great opportunities to win votes in the next election from the Center Party, perhaps also from the Social Democrats. On

the left flank of the Social Democrats there are groups that wish for a more socialist policy.

The VPK Could Increase to Ten Percent

The VPK now has 10 percent of the voters in Stockholm city, Stockholm province, Gothenburg city and Norrbotten province. If Falldin fuels new nuclear plants the VPK has opportunities in the next election for becoming a ten-percent party in the entire country.

Lately, the VPK has been exposed to hard attacks, primarily from Palme but also from Ullsten. These attacks must be viewed against the background of the popular front cooperation with the Center Party in the nuclear power issue. The VPK is to an increasing extent the next best party for many voters, above all, of course, Social Democrats. But many public employees are also interested in the VPK.

Despite all, the VPK is not the worst threat to Falldin's political life. Within the Popular Campaign Against Nuclear Power there are express plans for forming a new environmental party for the next election in order to carry on the struggle against nuclear power.

Environmental Party Could Pass the Barrier

If Falldin fuels four new nuclear power plants the chances increase that such an environmental party would pass the four-percent barrier in the next parliamentary election.

A new environmental party would primarily lure voters from the Center Party which after the fueling will have lost its only important political issue. Liberals who are against nuclear power would also be able to join this party, just as KDS /Christian Democratic Union/ people. Certain Social Democrats and VPK members could also gather under these banners.

The nuclear power referendum thus -- that conclusion is inevitable -- first and foremost becomes a party-political act, not a vote on an individual issue. This indicates that party loyalty will grow the closer we get to the day of the referendum.

11949
CSO: 3109

BOURGEOIS COALITION LIKELY TO CONTINUE AFTER N-VOTE

Stockholm DAGENS NYHETER in Swedish 22 Feb 80 p 6

[Commentary by Sven Svensson: "The Three Governing Parties Are Forced to Stay Together"]

[Text] The three bourgeois governing parties are more or less forced to stay together after the popular referendum on nuclear power. A government crisis would be practically impossible to resolve and new parliamentary elections would probably result in a socialist majority after an election success in particular for the Left Party-Communists.

And yet a government crisis/new elections cannot be excluded as a result of a political accident. The margin in Parliament is the slimmest one imaginable with 175-174 and no matter how the result of the referendum turns out it will release great tensions between the three governing parties.

The opinion polls indicate that it is unlikely that alternative three will win a majority in the referendum, even if it is impossible to be certain. A victory would constitute great gain in prestige for Falldin.

After a victory for alternative three the most logical solution would be for the Center Party alone to form a government in order to undertake the abolition of nuclear power. Falldin would then be able to threaten with new elections if Parliament made a great deal of trouble. However, most things indicate that the three bourgeois governing parties would try to stick together even if alternative three were to win.

That alternatives one and two will receive more than 50 percent of the votes appears today to be the most likely outcome of the referendum. In that case Falldin must immediately fuel the four completed nuclear reactors or step down. A delay would be fatal for the credibility of the bourgeois government coalition and for the reputation of the politicians.

Would it be better for the Center Party if Falldin were to resign and not fuel any new nuclear power plants?

Falldin himself believes that a yes in the referendum implies that the people has given him authority to fuel more nuclear power plants.

Many voters will find this incomprehensible.

Does the Liberal Party Dare Form a Government With the Social Democrats?

However, this is first and foremost a question for the Center Party. Fueling new nuclear power plants and administration of continued expansion of nuclear power must be based on evaluation of how the general credibility of the Center Party will develop after such a complete turnaround.

On the other hand, another thing is completely clear.

Forming a new bourgeois government if the present three-party coalition fails will be more than difficult. The Social Democrats will not one more time resolve the government problems of the bourgeois by letting the Liberal Party come to power.

The various government alternatives thereby vanish into thin air. An exclusive Center Party government is unthinkable after a loss in the referendum, and government cooperation between the Liberal Party and the Conservatives is out of the question for political reasons. Not even a completely Conservative government is a viable alternative, even if alternative one were to succeed in the referendum.

Does the Liberal Party dare break up the Falldin government and form a government together with the Social Democrats, their buddies in alternative two?

Palme quickly got cold feet when in 1978 he let the Ullsten government come forward. The party opinion could not understand that maneuver. Palme was also quick to demand the resignation of the Ullsten government after the 1979 election.

The situation in the coalition issue would have been different had Palme allowed Ullsten to remain through the referendum.

The coalition plans across the bloc boundary can be written off for a considerable time to come.

Is a new election conceivable?

Center Parties Suffer New Losses

In principle it is the government which calls for new elections and a party in a government coalition can be considered to have a veto right. If the three government parties disagree over an important political issue, new elections are still the logical consequence of disagreement in the government.

The Conservatives do not have to fear a new election. Ullsten is riding the crest of the wave and would probably increase his election figures. Since a new election would probably lead to a socialist majority after a success for the VPK, above all, the Conservatives are not interested in a new election.

For the Liberal Party and the Center Party a new election would be nothing short of distressing. Most things indicate that the two center parties would suffer new losses in a new election over the energy issue, worst of all perhaps the Center Party in which the split between the green center and the country center is significant.

Disagreement About Coal

The three bourgeois governing parties are therefore forced purely by a self-preservation instinct to avoid new elections in every way since this would only favor the Social Democrats and the VPK.

If Fälldin considers himself able to agree to fuel new nuclear power plants after a majority of the people has given the go-ahead, it ought to be a minor matter to shape an energy bill which is based on the use of nuclear power for a few decades and afterwards greater emphasis on alternate sources of energy such as forest waste, peat, wind and solar power. The disagreement concerning the role of coal must be bridged in some way.

Increase in Value-Added Tax Unavoidable

On the other hand, there are other questions which could become troublesome for the Fälldin government and which can lead to defeat in Parliament.

Sweden's economy is undermined by a huge budget deficit and an equally large deficit in the balance of trade. An increase in the value-added tax can become an unavoidable component of economic policy and restrictions may become necessary in order to reduce imports.

Many parliamentary questions will become difficult to bring off for the Fälldin government during the remainder of the mandate period even if the energy issue is resolved reasonably well, which is not an obvious fact. The cuts for the shipyards already appear to be a fatal issue, since the Social Democrats intend to make life as miserable as possible for the government.

The cuts in state subsidies to the municipal regions can also strain the unity in the government coalition, or at any rate the unity within the Center Party.

Even if the bourgeois parties do their best to camouflage the split on the energy issue, it cannot be excluded that the Social Democrats and the VPK will succeed in finding a hole in the armor of the bourgeois parties, a hole which nevertheless would force a government crisis and a new election.
11949
CSO: 3109

BOOK CHALLENGES GENERAL BELIEF THAT N-WAR UNLIKELY

Stockholm DAGENS NYHETER in Swedish 20 Feb 80 p 4

[Article by Maj Britt Theorin]

[Text] There is general agreement in parliament concerning the basic principles of defense policy. This has prevented a comprehensive debate and allowed the armed forces to determine their own direction. But Swedish defense planning is unrealistic. The risk is not a major attack or a protracted conventional war. Instead the armed forces should count on a nuclear arms catastrophe or a surprise attack. That is the view of Wilhelm Agrell in his controversial book, "If War Doesn't Come."

Wilhelm Agrell's controversial book, "If War Doesn't Come," published by Liber, which concerns Sweden's future defense and security policy, has a good chance of having some effect on the broadening defense debate. Partly because it is an attempt to present a well-planned alternative to the present defense policy--something that has been lacking until now--and partly because his book seems to have come at the right time after books like "Eleven Views" broke the ground.

The author has experience and knowledge in the areas he is dealing with. He has worked on both the air force and defense staffs, he has been a regular participant in the Swedish defense debate and at present he is studying issues concerning security policy and armaments.

His participation in the debate has upset some people, leading among other things to the information division of the defense staff sending a letter in September 1978 to military writers pointing out that "various 'movements' are attacking military defense and former defense staff member Wilhelm Agrell is aiding and abetting them from behind." No one is more dangerous than a person who knows the system from inside!

History

"If War Doesn't Come" gives a historical explanation for present defense thinking and a critical analysis of the type of war our defense is prepared to meet--a major invasion. Agrell points to non-military threats to our industrialized society and outlines an entirely new model for the limited objectives military defense could have from now on. In doing so he makes use of the types of weapons technology with the greatest possibilities for development in a predominantly defensive military response.

The author shows that it is a long time--the end of the Middle Ages, in fact--since Russia has been the major enemy. The "Russian scare" was given an ideological dimension when the socialist state was formed to the east following World War I. This led among other things to the erection of protective border states between capitalist Western Europe and the Soviet Union. The border state concept also dominated Swedish security policy in the 1920's and explains Sweden's actions in World War II.

After World War II Swedish defense was developed according to the doctrines established then. The threat would be from an assault by the marginal forces the Soviet Union could spare in connection with a hypothetical major war on the continent. The defense system would be called on to meet a major invasion by sea, air and land.

Defense solidified in the form resulting from the rapid arms build-up in the 1940's. The result was a strong field army backed by a large air force for air defense and air and naval combat forces capable of quickly repelling an enemy invasion.

Debate Blocked

Agrell sharply criticized the fact that the parliamentary unanimity on defense and security policy has blocked any serious debate. This has allowed Swedish defense to develop into a separate system outside of politics so that in practice there has been no control exercised over the military.

To a large extent military authorities have been able to steer the process in the desired direction with the exception of measures taken for reasons of national fiscal economy, such as the elimination of certain units.

The debate in the 1970's over "peripheral defense" (far from our coast) or "surface defense" (on Swedish soil and with extended conflicts)--often expressed in terms of technically advanced defense or "tough fighters"--simply showed that both camps were prepared to meet the same type of threat, namely a large-scale Soviet invasion.

The view of an extended major war as a future possibility on which Swedish defense planning is based is unrealistic. Agrell is not alone in his criticism. Several of the writers in the book, "Eleven Views," also made this point. The real risk--unless a conflict is halted right away--is that a conflict could lead to a destructive nuclear duel. Others have said this before too, among them Alva Myrdal in TIDEN, October 1977:

"As long as the conflict-laden strategy of the superpowers remains the same with its reliance on nuclear weapons in a possible future war in Europe a demand for freedom from nuclear arms is a realistic priority for Swedish defense policy. This should take precedence over dusting off obsolete plans based on the idea that an invasion of our country is the real threat."

Major Assault

Agrell believes that the major assault for which Swedish defense is preparing is even more unrealistic than an extended conventional war in Europe. It would take such a massive commitment of forces by the attacker that it would be out of proportion to the gains he might make on this very unimportant front.

Our policy of neutrality and our role in Scandinavia cannot serve as acceptable reasons for continuing Swedish military defense plans in their present form and orientation. Instead we should have considerable maneuvering room in which to decide how to defend the neutrality of the country in a wartime situation, in Agrell's opinion.

There are probably many people who would agree with Agrell this far. But it is considerably harder to gain support for the new defense and security policy he outlines. That may be mostly for psychological reasons, due to the fact that the changes are so radical.

He presents a defense against various military threats even if they are not politically probable. He sees two conceivable situations:

A total collapse of the security system in Europe resulting in a nuclear catastrophe. In this situation the military role would be limited. Instead, civil defense would play a central role. It should be given a different and broader orientation than it has today when it tends to be assigned a support function supplementing military defense.

A surprise attack on Sweden--more for political rather than military reasons, to establish an "accomplished fact"--occurring during an acute crisis between the superpowers or at the moment war breaks out between them. Military defense should act as a guard against this situation--a surprise military attack--and prevent conflicts from "spilling over" into our country.

New Model

It is not very sensible in Agrell's opinion to first reject the idea of defense against a major invasion and then recommend a reduced defense system geared for exactly that type of warfare. Therefore he outlines an entirely new model which compensates for large portions of the air force, navy and army field units. The model is based on a kind of militia made up of small and independent units. The model is much less expensive and utilizes a weapons technology capable of development that we can produce ourselves.

This militia defense would be combined with a kind of "national fire brigade," an emergency force in charge of safeguarding our neutrality. Here we can see the similarity with the neutrality guard of Alva Myrdal and others. Like many other people Agrell rejects the idea of an elite defense force and maintains the principle of universal military service.

Agrell's view is that military defense should never be aimed at fighting a lengthy war covering large areas of Sweden, a view in sharp contrast with this goal: "Resistance will be offered in every part of the country, even in the form of open warfare if need be."

But the premise for Agrell's conclusion is that there is no point in constructing a situation in which it would be in the interest of the aggressor to pursue such tactics. It is an example of military inflexibility to try to force an attacker to fight a protracted war while the country bleeds to death, in Agrell's view.

The idea behind the present defense policy is that we must be ready when war comes. But what if there is no war? Or if it is not the kind of war we had in mind? International developments in the 1970's clearly indicated other assumptions for Sweden's defense and security policy.

Strong interests work against any new idea that would reduce the importance of military defense. They feel this is irresponsible as long as large armed forces are stationed around Sweden. But Agrell wonders if it isn't far more irresponsible to direct our entire national security policy toward being ready the day enemy troops land on the coast of Skane, ignoring all the threats that might confront Sweden on a day when war doesn't come, a day when the enemy cannot be thrown into the sea with a massive counterattack.

The book is aimed at a large public. In a way that is easy to understand Agrell makes security and defense policy accessible to everyone. The fact that many of the book's ideas and criticisms are familiar does not detract from its value. On the contrary it is a great advantage to have the discussions of recent years clarified methodically by a military expert who also provides the historical background for the current critical analysis. This is particularly important when we are discussing Swedish defense in the future.

6578
CSO: 3109

ARMED FORCES CHIEFS DISCUSS BUDGETS, EQUIPMENT, READINESS

Stockholm SVENSKA DAGBLADET in Swedish 3 Feb 80 p V

[Article by Erik Liden]

[Text] SVENSKA DAGBLADET brought together the chiefs of the armed forces of this country for an open round table discussion sponsored by the newspaper. The precarious situation of the armed forces in the period leading up to the 1982 Defense Act was analyzed in detail in this unique discussion which has no precedent in Sweden. There was broad agreement on the need for a serious and fundamental security policy debate in Sweden.

Armed forces chiefs Nils Skold, Per Rudberg and Dick Stenberg are worried about the future of defense: "We must have a better economy, greater expertise and increased political interest."

The participants at the SVENSKA DAGBLADET round table were in thorough agreement that the Swedish security policy debate is a limited one.

[Chief of the Swedish Navy Per Rudberg] Partial issues such as complicated materiel decisions interest the mass media more than presenting a unified picture of the tasks and future of the armed forces. The general public lacks background.

[Chief of the Swedish Army Nils Skold] There is little political interest in defense issues. There are no big issues today. But freedom and independence are the basis for all other social developments. While the defense share of state spending has been declining steadily for 20 years [illegible]ing said that we can't afford to improve our defense. Many politicians want a strong defense but fail to understand how economic developments have eroded previous decisions.

[Rudberg] I have the impression that parliament could easily pass a limited economic resolution instead of being guided by defense spending needs and giving us the economic resources to meet those needs.

[Chief of the Swedish Air Force Dick Stenberg] I think ignorance is a big problem. I keep noticing how amazed politicians on defense committees and study groups are when we talk about the economic reserves we have to allow for in our plans to take care of inflation. Inadequate compensation is a big problem.

Spasmodic Planning

[Rudberg] The armed forces differ from other social sectors because of the 5-year act which can be changed economically each year if the situation warrants. The politicians have not regarded the situation as being that serious and so far this has not happened. Other areas are reexamined each year and can get higher appropriations that way. Of course a long-range act is a good thing but when plans cannot be implemented for economic reasons it makes planning very spasmodic.

[Skold] I think it is vital to bring about a broad and serious debate on the complicated problems of the armed forces prior to passage of the 1982 Defense Act. This will be tough and very decisive for the future. I would rather not see big headlines about unrelated individual materiel projects.

[Rudberg] The background for our defense efforts is of course the world we live in and it has changed in the last 10 or 15 years. Not in a drastic way but gradually so that Sweden is no longer on the border between East and West but in the middle of an area with greater contrasts than used to be the case.

There have been high hopes for the consequences of detente among the superpowers and these hopes have affected the Swedish defense debate too. These hopes have come to nought. One must build on realities, not hopes. People in Scandinavia in particular have counted too heavily on detente and that is a drawback in a world that is increasing its armaments.

[Stenberg] Stability in Scandinavia is important and we ourselves must show that we believe in our policy of nonalliance. Finances are decisive and inflation has made materiel renewal difficult. Only oil prices rose more quickly in the 1970's than the cost of compulsory military service. Air force people are more expensive now than they were in 1972 even though 500 jobs were eliminated through rationalization and we received some price compensation.

[Skold] The next Defense Act must include a higher economic total framework and better price compensation so that we can do our job on reasonable terms. This year I have requested an additional 95 million kronor

to reinforce refresher training, among other things, but unfortunately the government was unable to go along.

[Rudberg] I need another 200 million kronor a year to deal with the problem and to maintain the strength of the navy.

[Stenberg] A lot could be done with 50 million kronor a year. It would even allow for the airplane we have been waiting for for over 3 years now.

(Thus the chiefs of the armed forces branches agree that an additional 350 million kronor a year would substantially improve the defense situation.)

[Stenberg] Technology and people must go hand in hand, even in the military. The high technical standards in Sweden create a good basis for a proper balance between technology and personnel in the military organization. The Commander in Chief is working with us on the so-called perspective plan studies aimed at reaching the proper balance so that technology can be used correctly. This calls for being able to move various units around and use them in different ways. This means that something like an airplane must be complex and expensive to achieve really high quality. But people are expensive these days too. The air force wants a Swedish profile and to date 90 percent of defense materiel spending has gone to Swedish industry. This is very important for our credibility abroad.

[Rudberg] Generally it is not advanced technology that is required but a high technical level that is not terribly expensive. We have done very well here. For example, 75 years of experience in Swedish submarine building has resulted in a high-quality international product at a relatively modest price. The unbroken production at Swedish shipyards is of enormous importance in this context.

[Skold] The will to resist is vital. Without a determination to defend ourselves in Sweden weapons are of little use. This also calls for many well-coordinated units, confident of their own ability to meet wartime demands.

The modern equipment that is needed is constantly being provided, infantry gun carriers, artillery and anti-aircraft missiles. They have attracted international attention and army products usually sell best on the export market.

[Stenberg] Although we have few draftees in the air force they are very important where teamwork is needed, for example when an airplane must be made ready. Usually 7 of the 8 men in a group are regular soldiers. In a tight economy we have to look at draftee training too. The army has the greatest opportunities to further differentiate training periods.

[Skold] Many people use that inaccurate argument. Today with a 7.5 month training period we get fairly good results. Deficiencies in night combat, defense and second-hand reports must be corrected. Therefore continual refresher training is vital to facilitate teamwork. There is no way we can shorten a training period that is already short by international standards. It is our responsibility to make sure draftees can survive in a war and that takes training of a high quality.

I also feel that universal military training is very significant with regard to giving the armed forces a solid base among the people. An attacker knows that he will encounter not only a strong defense but the collective resistance of all our people.

[Rudberg] Sweden should be able to afford both the human defense forces and the materiel power that inspire the respect of others and confidence in the individual draftee. With a reasonable defense economy the draftee problem will not become acute but if things continue to go downhill this will be an extremely important and difficult problem. The Swedish conscription system is a good one but some checking just before call-up and some reassignments could reduce the number of soldiers currently failing basic training who cannot be used in a war situation.

[Skold] We are striving for the largest possible group of draftees and therefore we would like to counteract a high attrition rate during training. In this we have the full support of the draftees themselves. I also think there should be room for women in a conscription system. If civil defense needs more people all three branches of the armed forces should be prepared to release those between 30 and 35 from the military organization and assign them to civil defense. And draftees who are conscientious objectors should also be used in better ways than they are today.

(All agreed that as much as possible Swedish defense efforts should be based on universal military service. International contacts also showed that Swedish draftees have good skills and their technical ability also earns them well-deserved respect, in the view of SVENSKA DAGBLADET's guests.)

Constant Choices

[Stenberg] An important choice for us in the air force is whether we should continue with a Swedish profile and Swedish airplanes or whether we will be forced to buy finished ready-made foreign components. But the important question is whether we would earn any money from making purchases abroad.

[Skold] Technical developments lead to constant choices. We must rationalize the peacetime organization to get an efficient wartime

organization. In this context it is appropriate to discuss the importance of missiles so that it is given proper attention prior to the passage of the 1982 Defense Act. Air force missiles are increasing their range and precision while at the same time they can be concealed. This increases their usefulness.

[Rudberg] Mobility has increased an attacker's choices and therefore our own units must be able to move quickly and be capable of being concentrated in certain areas. Our geography facilitates this while at the same time technical developments provide advantages for both attack and defense.

[Stenberg] I am aware of missile developments. But even in the future they will have to be used by military personnel on land, on sea or in the air. A combination of land, sea and air combat forces should not differ too much from the current balance among the various branches of the armed forces.

[Skold] Although the air force has been reduced we have the fighter plane recommended by earlier study groups but only half of the missiles promised to the army. Relations should be different today and we must take that into consideration. Helicopters are being phased out in Sweden while other nations have had positive experiences from using them to carry weapons. Where helicopters and missiles are placed within the organization is of less importance.

Respect Abroad

[Skold] We must be able to repel an invasion that could lead to occupation as well as an overflight action. Anything else would detract from the credibility of our freedom from alliances and our stated neutrality.

[Stenberg] Our preparations are geared to preventing overflights. Both civilian and military radar stations are used in peacetime as well as wartime. In addition fighter planes are sent up at least once a day to check for unauthorized air activity in our air space. This can't be done with missiles. We also know that these preparations inspire respect abroad.

[Rudberg] We have mentioned the great importance of Swedish industry for the armed forces. The electronics industry probably has the most influence today in such areas as missile development. Specific Swedish systems are hard to beat in an increasingly complex teletechnical environment.

[Stenberg] International air forces rely on Swedish components that are spinoffs from our airplane industry. We export a lot in this area.

[Skold] It is a vital industry but it's wrong to link it solely to aviation. The aviation industry hasn't generated a thing. But there are constant developments in electronics.

Pure airplane production does not give any related skills or electronic development. But the Swedish system has great advantages if industry is prepared to come up with what we want at the right time. We can't adjust our needs to shore up employment, as industry sometimes seems to think.

[Rudberg] I think actually industry is trying to adjust to our terms. The navy's new surface-target missile which the government wants manufactured in Sweden demonstrates that industry can change. First an old system was presented which our technicians could not accept. Now, a year later, we have been promised an entirely different and improved modern missile. The military must be prepared to make demands and allow for some give and take.

Mobilization at Proper Time

(The importance of mobilizing at the proper time was stressed. Per Rudberg wanted to increase the number of immediately available combat units. Therefore the navy wants to train more draftees directly onboard combat vessels or on coastal artillery batteries out in the archipelago.)

[Skold] That is desirable but it would take longer, perhaps doubling the conscription period. I think mobilization will still be important even if it has to be done during a conflict. The Home Guard and units with basic training are a vital supplement. Protection must be improved so units don't risk being eliminated quickly by a surprise attack.

[Stenberg] In addition to draftees the air force relies on permanent key personnel, especially our pilots. The uncertain future has caused many of them to quit and take on attractive civilian jobs. Their expensive special training is a reason for paying them better and motivating them in their work. Quite simply we need to look after our personnel better than we have in the past.

[Rudberg] I would like to underline that. Our people need the support of the general public. Their job is to defend the nation, not themselves. They should be respected and esteemed for their vital contribution to the defense of our country.

[Skold] That is an important issue which we should never forget. We cannot have an effective defense system without capable personnel.

6578
CSO: 3109

GOVERNMENT TO ASK RIKSDAG TO PURCHASE JAS FOR AIR FORCE

Stockholm DAGENS NYHETER in Swedish 21 Feb 80 p 8

[Article by Sven Svensson]

[Text] Sweden will invest 1 billion kronor a year for 20 years in a new airplane system, JAS/Ny [expansion unknown]. The government proposed this Wednesday in a bill that will soon be presented to parliament. The prerequisite is an absolute offer by the Swedish aircraft industry, headed by Saab-Scania.

Social Democratic leader Olof Palme does not reject the new airplane system but feels the government has committed itself too firmly at a very early point.

The decision on the new airplane system which will replace the Viggen platform in the 1990's involves an important opinion statement on security policy, Defense Minister Eric Kronmark (Conservative) said when he presented the government's decision.

The decision means that as in the past Sweden will rely on a strong air defense system. Pursuit planes are the most important element and will protect us from flights over Swedish territory while in the future fighter-bombers will be less important.

Lower Level

The decision to invest in a new airplane system means the Swedish aircraft industry will survive but at a much lower level than is now the case.

Investing in a new Swedish combat plane creates possibilities for civilian production at Saab-Scania too. But the development division at Saab-Scania which now consists of 2000 people must be cut drastically in the near future. Kronmark was not prepared to give the extent of the cuts that would have to be made.

In the future industry must have major supply responsibilities. In plain language this means that the Defense Materiel Board which in the past had broad control over airplane planning will have its activities trimmed. Kronmark could not say how great the cuts would be in this case either.

The government's decision means an abandonment of all plans to acquire a light attack and training plane of the B3LA type. Defense Minister Kronmark has made a complete about-face.

Plans to acquire a new training plane, the starting point of all discussions of new airplanes in the 1970's, have been postponed. Kronmark explained that acquisition of training planes can be delayed until the mid-1990's. The defense system will then need 45 training planes. The most natural solution would be to purchase these planes abroad.

September 1981

As we reported several weeks ago the government's decision means that Saab-Scania will receive 200 million kronor until the end of 1981 to develop the new airplane platform. The aircraft industry will invest an equal amount of its own money.

Commander in Chief Lennart Ljung will be asked to make a report providing the basis for a decision on acquisition of the JAS system by 1 September 1981 at the latest. The report will consider a binding offer for a Swedish alternative and provide price comparisons with a binding foreign offer.

There will be a need for some political supervision of the Commander in Chief's planning. The political party representatives on the military staff advisory board must be informed on the Swedish JAS project and the foreign contacts that are made.

In 1981 the Defense Committee will present proposals on the format of our defense system for the next 5-year period. The 1982 parliament will then decide on defense orientation and on the new airplane system.

There are three possible major alternatives to a JAS platform:

1. A united domestic development of a plane weighing half as much as the Viggen but having about the same performance level.

2. Cooperation with another country on a joint project.

3. Direct purchase abroad of a plane like the American F-16.

Swedish development of a JAS platform would mean that it could be adapted to Swedish needs. The airplane body would be developed in

Sweden and it is hoped that the engine would be licensed for manufacture by Volvo Airplane Motors in Trollhattan.

A Swedish solution would mean that payment could be extended over a long period of time with less strain on our balance of payments.

Direct purchase abroad would provide technical and economic certainty but would involve a big expenditure of currency and enormous cost problems.

Social Democrats Not Opposed

The Social Democrats have discussed the airplane issue in leading party organs but they have not committed themselves. They are not opposed to the acquisition of a new plane.

"The non-socialist decision largely anticipates the work of the Defense Committee," said Olof Palme in a comment. "We are confronted with many difficult problems of balance within the total defense system while at the same time state finances are hard-pressed. It is not right to definitely commit the direction of next year's defense budget," Palme said.

"We Social Democrats, standing as we do for popular defense based on universal military service, see a risk that the government's position could have a negative effect on our chances for a well-rounded and balanced total defense system.

"Some funds are needed to preserve our freedom of action in 1982. We have not yet heard anything to confirm that the 200 million kronor the government is proposing are really necessary," Palme said.

6578
CSO: 3109

ARMY DISCOVERS CLOTHING INADEQUATE FOR NORTH WINTER GAMES

Stockholm DAGENS NYHETER in Swedish 13 Feb 80 p 2

[Article by Caj Noren]

[Text] Boden, 12 Feb--"The men are right when they complain about the mittens supplied by the military. They don't hold up under conditions of extreme cold!"

So said chief of staff at I-19, Lieutenant Colonel Borje Wangel who--like most of the draftees--brought along his own gloves for winter maneuvers. I-19 will now send a report to the chief of the army, charging that the poor mittens issued could knock out Swedish defenses in all of the northern part of the country if we are attacked during a cold spell!

During the I-19 maneuvers last week the temperature was below -40° C. Regimental doctor Per Morsing of Boden took part in the entire exercise. About 15 soldiers received frost injuries.

"Except for some special duties the exercises are naturally adapted to the temperature," Dr Morsing said.

Minor Injuries

"All the frost injuries were of a very minor nature and healed within a week. They included small blisters on noses and fingers.

"But in principle all frost injuries are unnecessary. It is a matter of having the proper equipment," Per Morsing said.

Many of the draftees--and officers--brought along their own clothing to supplement those issued by the state. Gloves, shirts and underwear made of synthetic fabric are increasingly found in soldiers' back packs. Proof that Swedish military clothing simply doesn't measure up!

"It doesn't necessarily mean that," said chief of staff Borje Wangel. He feels the state's woollen clothing is superior to modern synthetic materials if all the advantages and disadvantages are carefully considered.

Feet Warm

Oddly enough soldiers don't usually complain about cold feet, according to the chief of staff.

"That is because up here we are supplied with special felt boots that are good and warm."

But it is obvious that the Defense Materiel Board fails to realize that warriors whose hands are freezing won't function well.

"The military should consider the consequences of not equipping soldiers so that all their clothing prevents frost damage during periods of extreme cold," Borje Wangel said.

During a mobilization it is not certain that all soldiers would be as far-sighted as the draftees in Boden who brought their own articles of clothing along with them.

Today draftees are issued a glove ration and woollen mittens along with a leather pair of mittens to wear over the other two pairs.

"But unfortunately the material in them wears out after only a few washings," said the I-19 chief of staff, Lieutenant Colonel Borje Wangel.

6578
CSO: 3109

STUDY SHOWS HIGH RATE OF ALCOHOL ABUSE IN MILITARY

Stockholm SVENSKA DAGBLADET in Swedish 15 Feb 80 p 4

[Article by Erik Sidenbladh]

[Text] Linkoping--Some 26 percent of the 19-year-olds called up for military service drink beer or liquor almost every night in order to relax. Almost the same amount, 28 percent, get drunk once or twice a week.

These figures come from a study conducted by Ake Bliding of the Malmohus County Council's alcohol team among draftees in Skane last year.

He has kept track of developments since the mid-1960's. In 1966 4 percent reported that they drank more than the equivalent of 1 liter of pure alcohol a month. In 1970 the figure was 20 percent.

In another study in 1977, the results of which are not exactly comparable, 20 percent reported that they drank more than 1 liter a week.

"We are talking about a sharp increase in the last part of the 1960's and perhaps a doubling in the early 1970's. Consumption in recent years seems to have been quite stable. But it has stabilized at a terribly high level," said Ake Bliding. "The kind of consumption reported by one out of four 19-year-olds can lead to damage if continued and many don't settle down and start a family before they have become dependent on alcohol.

But ignorance concerning the risks is absolute. Only 2 percent said yes when asked if they suspected they might develop an alcohol problem. "We had thought we would get a response of at least 10 percent," Ake Bliding said.

The mass media campaign against sleeping pills and other psychodrugs has had an enormous effect. In sharp contrast to the 1960's it is almost

impossible to get young people to take sedatives now. It should be possible to launch a similar campaign against the use of alcohol as a sedative, especially since the risk of addiction is much greater.

Since 1977 Ake Bliding has tried to promote prevention among draftees with the help of the so-called GT [expansion unknown] test. This measures the increase of an enzyme in the liver which in 75 percent of all cases is connected with a high usage of alcohol.

"It is a dubious thing to use such a test to police the men, to check on them," said Ake Bliding. "Our preventive work must be based on trust, on making them aware that this is something that concerns them.

"We use the GT test in a kind of biofeedback system. The test is done on a voluntary basis and the draftee is given the results so that he can make a change in his own behavior."

Ake Bliding presented his study at a conference in Linkoping on Thursday. It was arranged by TSA, the Interdisciplinary Seminar on Alcohol, and CAN, the Central Association for Information on Alcohol and Narcotics. There Milan Valverius, the court physician in Umea, also showed how the police check for sobriety could be given a positive social impact instead of being purely supervisory. In a spot check over a period of 3 years in Lycksele he found that 0.15 percent of the drivers were inebriated. In all 15 (in the study) had advanced alcoholic abuse problems without having been identified as alcoholics. In such cases we ought to consider sentencing the individual to a custodial setting, stressing prevention instead of punishment, Milan Valverius said.

The result, the fact that 0.15 percent of car drivers are not sober, agrees with statistics from the National Police Board. But Valverius' study showed that alcohol was involved in the picture to a much higher extent when an accident occurred. About 25 percent of those who died in collisions and single-car accidents had alcohol in their blood.

6578
CSO: 3109

BRIEFS

MORE VPK SUPPORT--The continued increase for the Left Party-Communists [VPK] is primarily an expression of growing voter support for the party's alternatives on employment issues and economic issues. This is what VPK party secretary Tore Forsberg says in a comment on the latest SIFO [Swedish Institute for Public Opinion Polls] poll. "The active contributions by the communists to the popular campaign in support of alternative three have also increased sympathies for the party. The attacks on the VPK and the Social Democrats in the parliamentary debate recently have not hurt the party. But they contribute to the strengthening of the right in Swedish politics and thereby damage a united workers' movement," Forsberg says. [Text] [Stockholm DAGENS NYHETER in Swedish 11 Feb 80 p 30] 11949

CONSERVATIVES, VPK GAIN IN POLL--The Conservatives and the VPK achieve record figures in SIFO's [Swedish Institute for Public Opinion Polls] election barometer for January. The Conservatives gain 2 percent for 24.0 total and the VPK [Left Party-Communists] increases by 1 percent to 7, compared to the December poll. The Center Party remains at 16 percent, while both the Liberal Party and the Social Democrats drop 1 percent and now have 8.5 and 43.5 percent, respectively. As before, the socialist bloc has a majority of the voters, 50.5 percent. The governing parties have 48.5. It is notable that the VPK voters have not reacted to the Soviet entry into Afghanistan. When the Soviet Union entered Czechoslovakia in 1968 the VPK at once dropped from 5.0 to 2.0 percent, The VPK's involvement in alternative three, on the other hand, seems to strengthen the party's position among the voters. [Text] [Stockholm DAGENS NYHETER in Swedish 11 Feb 80 p 30] 11949

3109

'HURRIYET': SPREADING TERRORISM IS DUE TO PENAL CODE INSUFFICIENCY

NC170930 Istanbul HURRIYET in Turkish 12 Mar 80 p 3 NC

[Editorial by Oktay Eksi: "There Is Something Wrong Somewhere But..."]

[Excerpts] It is reported that the number of the victims of terrorism has risen to 886 in the last 100 days. This is the highest record in our history of "anarchy and terror."

Meanwhile, accounting for the 100 days, Prime Minister Demirel kept saying "our state is powerful. The hands opposing the state will be broken. No one can be more powerful than the state;" as if such utterances are capable of achieving results. In fact, we have heard these words from Demirel's mouth at least 1,000, if not 5,000 times since 1968 when "anarchy" began to blossom.

However, that "great" and "powerful" state has been unable to score any positive results. On the contrary, "anarchy and terror" have kept on increasing every passing day. It is not what the state wanted but what the terrorists have planned that has gradually materialized.

This means that something is wrong somewhere. If you asked the Honorable Demirel, he would tell you that the failure to cope with anarchy and terror so far is due to the fact that the government has been waging this struggle alone. He contends that if all the constitutional institutions, the press, the public, and the man in the street cooperated with the government, the elimination of anarchy and terror would not be too difficult. This is true. We wish to confirm the Honorable Demirel's words by saying that if the constitutional court has been unable to study the dossier and decide in 8 months whether or not articles 141 and 142 of the penal code are contrary to the constitution, the martial law courts cannot be expected to finalize any of the cases that fall within these articles. And, as a result, anarchy assumes greater proportions. If, in spite of the provisions in the procedural laws, the courts unduly postpone the cases before them and degrade the law--and this is what is happening in our country--then Demirel is right. Again, Demirel is right when we consider the fact that the National Assembly neither abolishes nor inflicts capital punishment.

However, Demirel is not justified as much as he thinks. For until this moment, he has failed to make a specific statement that his government is determined to fight anarchy and terror in an "impartial" manner. To think it possible that the many crimes due to anarchy and terror, could be eliminated simply by blaming them on the "leftist" criminals, would mean somnolence on Demirel's part or that he is acting in such a way "as not to offend our friends on the right flank."

The truth is that both these possibilities are equally vehement. It is neither fair nor reasonable for a partisan prime minister or government to expect "confidence" and "support" from millions of fellow countrymen who would like to see an impartial government in office.

The Honorable Demirel should therefore rectify his own attitude first before criticizing those fellowcountrymen who refrain from assisting the police or appearing as witnesses before the court.

CSO: 4907

BRIEFS

EARTH TREMORS REGISTERED--Two tremors, one medium-strength and one light, were felt in Susehri, a district of Sivas, this morning. Susehri district official Unal Songul said that the medium-strength tremor was registered at 0630 and the light one at 0635. There were no casualties, nor was there material damage. [Text] [TA191033 Ankara Domestic Service in Turkish 1000 GMT 19 Mar 80 TA]

CSO: 4907 END

SELECTIVE LIST OF JPRS SERIAL REPORTS

WESTERN EUROPE SERIAL REPORTS

WEST EUROPE REPORT
WEST EUROPE REPORT: Science and Technology

WORLDWIDE SERIAL REPORTS

WORLDWIDE REPORT: Environmental Quality
WORLDWIDE REPORT: Epidemiology
WORLDWIDE REPORT: Law of the Sea
WORLDWIDE REPORT: Nuclear Development and Proliferation
WORLDWIDE REPORT: Telecommunications Policy, Research and Development

END OF FICHE DATE FILMED

11 April 1980

DD.